MINI MCR-2-RTD-UI - Resistance thermometer measuring transducer

2902049

https://www.phoenixcontact.com/us/products/2902049

Please be informed that the data shown in this PDF document is generated from our online catalog. Please find the complete data in the user documentation. Our general terms of use for downloads are valid.

CRA-READY



Configurable temperature transducer with plug-in connection technology for connecting 2, 3, and 4-conductor resistance thermometers and resistance-type sensors. Configurable via DIP switch or software. Screw connection technology, standard configuration

Product description

Configurable, 3-way isolated temperature transducer with plug-in connection technology. The device is suitable for the connection of resistance thermometers and remote resistance-type sensors with 2, 3, and 4-conductor connection technology. The measured values are converted into a linear and freely adjustable current or voltage signal. You can configure the device using one of the free software solutions. Default settings can also be made directly on the device by simply using the DIP switches (see configuration table). The measuring transducer supports fault monitoring and NFC communication.

Commercial data

Item number	2902049
Packing unit	1 pc
Minimum order quantity	1 pc
Sales key	C404
Product key	DK1125
GTIN	4046356649759
Weight per piece (including packing)	125 g
Weight per piece (excluding packing)	110 g
Customs tariff number	85437090
Country of origin	DE

Technical data

Notes

Note on application

Note on application	As things stand now, we are preparing the product so that, as of December 11, 2027, it will comply with the requirements of the EU Cyber Resilience Act (CRA) based on the information currently available regarding the CRA.

Utilization restriction

EMC note	EMC: class A product, see manufacturer's declaration in the download area

Product properties

Product type	Temperature transmitter
Product family	MINI Analog Pro
No. of channels	1
Configuration	DIP switches
	Software
	App

System properties

Functionality

Configuration	DIP switches
	Software
	App

Electrical properties

Electrical isolation	3-way isolation
Electrical isolation between input and output	yes
Protective circuit	Transient protection
Step response (0–99%)	200 ms (2-conductor)
	500 ms (3-conductor)
	500 ms (4-conductor)
Maximum temperature coefficient	0.01 %/K
Transmission error resistance-type sensor	2 Ω
Transmission error resistance thermometer	0.1 % * 350 K / set measuring range; 0.1 % > 350 K (Pt/Ni)
	0.3 % * 200 K / set measuring range; 0.3 % > 200 K (Cu)

Electrical isolation

Overvoltage category	II
Pollution degree	2

Electrical isolation Input/output/power supply IEC/EN 61010-1

Standards/regulations	IEC/EN 61010-1
Rated insulation voltage	300 V_{rms}
Test voltage	3 kV AC (50 Hz, 60 s)
Insulation	Reinforced insulation

Supply

Supply voltage range	9.6 V DC ... 30 V DC (The DIN rail connector (ME 6,2 TBUS-2 1,5/5-ST-3,81 GN, item no. 2869728) can be used to bridge the supply voltage. It can be snapped onto a 35 mm DIN rail in accordance with EN 60715)
Typical current consumption	32 mA (24 V DC)
	63 mA (12 V DC)
Power consumption	≤ 850 mW (at I_{OUT} = 20 mA, 9.6 V DC, 600 Ω load)

Input data

Measurement

Number of inputs	1
Configurable/programmable	Yes
Sensor types (RTD) that can be used	Pt, Ni, Cu sensors
Temperature measuring range	-200 °C ... 850 °C (Range depends on sensor type, range can be set freely via software or in increments from -150°C to 850°C via DIP switches)
Temperature measuring range	≥ 20 K
Sensor input current	approx. 200 µA
Max. permissible overall conductor resistance	≤ 25 Ω (Per line, RTD in 3- or 4-conductor technology)
	≤ 50 Ω (adjustable, RTD in 2-conductor technology)
Linear resistance measuring range	0 Ω ... 4000 Ω (Minimum measuring span: 10% of the selected measuring range)
Connection technology	2-, 3-, 4-conductor

Output data

Signal: Voltage/current

Number of outputs	1
Configurable/programmable	Yes
Voltage output signal	0 V ... 5 V (via DIP switch)
	1 V ... 5 V (via DIP switch)
	0 V ... 10 V (via DIP switch)
	10 V ... 0 V (via DIP switch)
	0 V ... 10.5 V (can be set via software)
Max. voltage output signal	approx. 12.3 V
Open-circuit voltage	< 17.5 V
Current output signal	0 mA ... 20 mA (via DIP switch)
	4 mA ... 20 mA (via DIP switch)
	20 mA ... 0 mA (via DIP switch)

	20 mA ... 4 mA (via DIP switch)
	0 mA ... 21 mA (can be set via software)
Max. current output signal	24.6 mA
Short-circuit current	< 31.5 mA
Load/output load voltage output	≥ 10 kΩ
Load/output load current output	≤ 600 Ω (at 20 mA)
Ripple	< 10 mV_{rms}
	< 10 mV_{rms} (at 600 Ω)
Resolution, outputs (voltage)	1 mV
Resolution, outputs (current)	2 µA
Behavior in the event of a sensor error	configurable

Connection data

Connection method	Screw connection
Stripping length	10 mm
Screw thread	M3
Conductor cross-section rigid	0.2 mm² ... 1.5 mm² (with ferrule)
	0.14 mm² ... 2.5 mm² (without ferrule)
Conductor cross-section flexible	0.14 mm² ... 2.5 mm²
Conductor cross-section AWG	24 ... 12 (flexible)
Tightening torque	0.5 Nm ... 0.6 Nm

Ex data

Ex installation (EPL)	Gc
	Div. 2

Interfaces

Data: IFS interface

Connection method	Micro USB type B

Signaling

Status display	Green LED (supply voltage)
Error indication	Red LED

Dimensions

Width	6.2 mm
Height	109.81 mm
Depth	119.2 mm

Material specifications

Color	gray (RAL 7042)
Housing material	PBT
Fire protection for rail vehicles (DIN EN 45545-2) R22	HL 1 - HL 2

Fire protection for rail vehicles (DIN EN 45545-2) R23	HL 1 - HL 2
Fire protection for rail vehicles (DIN EN 45545-2) R24	HL 1 - HL 2

Environmental and real-life conditions

Ambient conditions

Degree of protection	IP20 (not assessed by UL)
Ambient temperature (operation)	-40 °C ... 70 °C
Ambient temperature (storage/transport)	-40 °C ... 85 °C
Altitude	≤ 2000 m
Permissible humidity (operation)	5 % ... 95 % (non-condensing)

Approvals

CE

Certificate	CE-compliant

ATEX

Identification	⟨Ex⟩ II 3 G Ex ec IIC T4 Gc
Certificate	BVS 20 ATEX E 024 X

IECEx

Identification	Ex ec IIC T4 Gc
Certificate	IECEx BVS 20.0017X

CCC / China-Ex

Identification	Ex ec IIC T4 Gc
Certificate	2025122310128087

UL, USA/Canada

Identification	UL 508 Listed
	Class I, Div. 2, Groups A, B, C, D T6
	Class I, Zone 2, Group IIC T6

Shipbuilding approval

Certificate	DNV GL TAA00002UA

EAC Ex

Identification	EAC Ex ec IIC T4 Gc
Certificate	BY/112 02.01 TP012 103.01 00079

Shipbuilding data

Temperature	B
Humidity	B
Vibration	A
EMC	A
Enclosure	Required protection according to the Rules shall be provided

	upon installation on board

EMC data

Electromagnetic compatibility	Conformance with EMC directive
Noise immunity	EN 61000-6-2
Note	When being exposed to interference, there may be minimal deviations.

Noise emission

Standards/regulations	EN 61000-6-4

Electrostatic discharge

Standards/regulations	EN 61000-4-2

Electrostatic discharge

Comments	Safety measures must be taken to prevent electrostatic discharge.

Electromagnetic HF field

Designation	Electromagnetic RF field
Standards/regulations	EN 61000-4-3
Typical deviation from the upper range value	0.06 %

Fast transients (burst)

Designation	Fast transients (burst)
Standards/regulations	EN 61000-4-4
Typical deviation from the upper range value	0.1 %

Surge current load (surge)

Standards/regulations	EN 61000-4-5

Conducted interference

Designation	Conducted interferences
Standards/regulations	EN 61000-4-6
Typical deviation from the upper range value	0.07 %

Standards and regulations

Electrical isolation	3-way isolation

GB Standard

Standards/regulations	GB/T 3836.1
	GB/T 3836.3

Mounting

Mounting type	DIN rail mounting
Assembly note	The DIN rail connector can be used for bridging the supply voltage. It can be snapped onto a 35 mm EN 60715 DIN rail.

Mounting position	any

Drawings

Block diagram

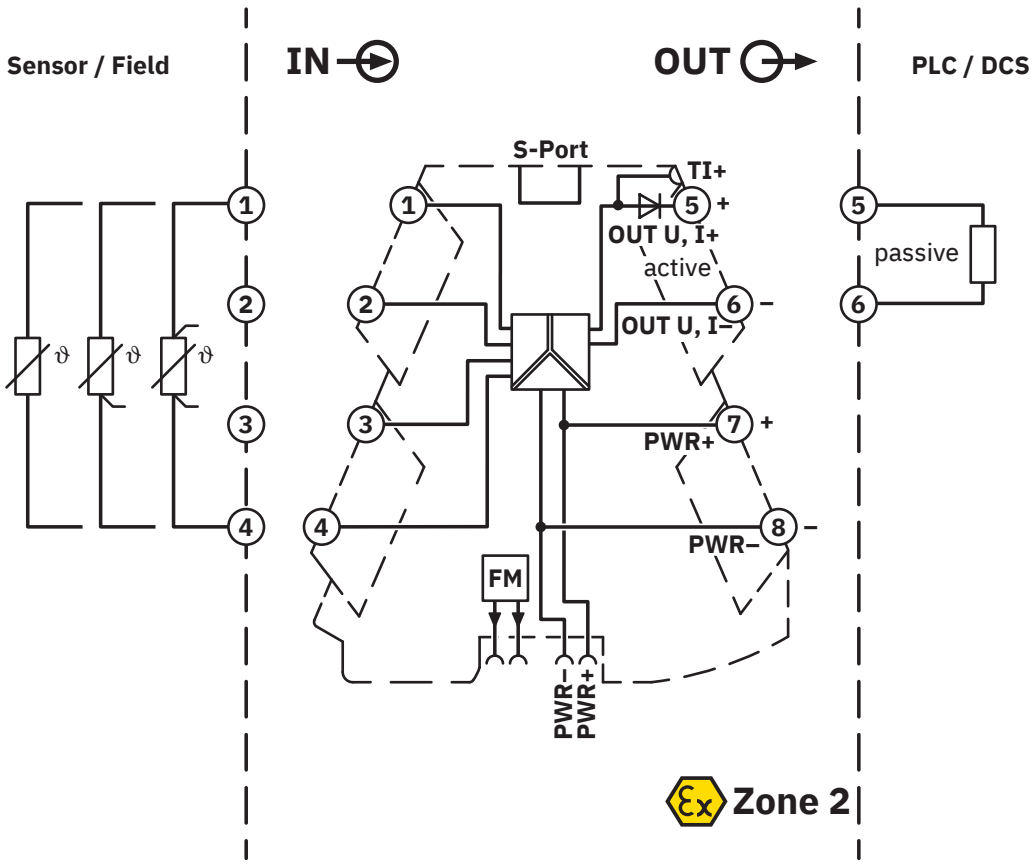

Approvals

To download certificates, visit the product detail page: https://www.phoenixcontact.com/us/products/2902049

UL Listed
Approval ID: FILE E 238705

cUL Listed
Approval ID: FILE E 238705

IECEx
Approval ID: IECEx_BVS_20.0017X

cUL Listed
Approval ID: E196811

UL Listed
Approval ID: E196811

ATEX
Approval ID: BVS 20 ATEX E 024 X

CCC
Approval ID: 2025122310128087

Classifications

ECLASS

ECLASS-13.0	27210129
ECLASS-15.0	27210129

ETIM

ETIM 10.0	EC002919

UNSPSC

UNSPSC 21.0	41112100

Environmental product compliance

EU RoHS

Fulfills EU RoHS substance requirements	Yes
Exemption	7(a), 7(c)-I

China RoHS

Environment friendly use period (EFUP)	EFUP-50
	An article-related China RoHS declaration table can be found in the download area for the respective article under "Manufacturer declaration". For all articles with EFUP-E, no China RoHS declaration table issued and required.

EU REACH SVHC

REACH candidate substance (CAS No.)	Lead(CAS: 7439-92-1)
SCIP	8ce962e6-a162-40f6-a68f-6e9a910aeaea

Phoenix Contact 2026 © - all rights reserved
https://www.phoenixcontact.com

Phoenix Contact USA
586 Fulling Mill Road
Middletown, PA 17057, United States
(+717) 944-1300
info@phoenixcon.com