MINI MCR-2-I-I - Input signal conditioner

2901998

https://www.phoenixcontact.com/us/products/2901998

Please be informed that the data shown in this PDF document is generated from our online catalog. Please find the complete data in the user documentation. Our general terms of use for downloads are valid.

CRA-READY



3-way signal conditioner with plug-in connection technology for the electrical isolation of analog signals. Input signal: 0(4) mA ... 20 mA, output signal: 0(4) mA ... 20 mA, screw connection technology

Product description

Standard signal 3-way signal conditioner with plug-in connection technology for the electrical isolation, conversion, amplification, and filtering of standard current signals. The measuring transducer supports fault monitoring and NFC communication.

Commercial data

Item number	2901998
Packing unit	1 pc
Minimum order quantity	1 pc
Sales key	C404
Product key	DK1121
GTIN	4046356649490
Weight per piece (including packing)	67.3 g
Weight per piece (excluding packing)	58 g
Customs tariff number	85437090
Country of origin	DE

Technical data

Notes

Note on application

Note on application	As things stand now, we are preparing the product so that, as of December 11, 2027, it will comply with the requirements of the EU Cyber Resilience Act (CRA) based on the information currently available regarding the CRA.

Utilization restriction

EMC note	EMC: class A product, see manufacturer's declaration in the download area

Product properties

Product type	Input signal conditioner
Product family	MINI Analog Pro
No. of channels	1

Electrical properties

Electrical isolation	3-way isolation
Electrical isolation between input and output	yes
Limit frequency (3 dB)	≈ ⎍ Hz
Protective circuit	Transient protection
Signal transmission behavior	In = Out
Step response (10-90%)	≈ ⎍ ms
Maximum temperature coefficient	0.01 %/K
Temperature coefficient, typical	0.01 %/K
Maximum transmission error	0.1 % (of final value)

Electrical isolation

Overvoltage category	II
Pollution degree	2

Electrical isolation Input/output/power supply IEC/EN 61010-1

Standards/regulations	IEC/EN 61010-1
Rated insulation voltage	300 V_{rms}
Test voltage	3 kV AC (50 Hz, 60 s)
Insulation	Reinforced insulation

Supply

Nominal supply voltage	24 V DC
Supply voltage range	9.6 V DC ... 30 V DC (The DIN rail connector (ME 6,2 TBUS-2 1,5/5-ST-3,81 GN, item no. 2869728) can be used to bridge the supply voltage. It can be snapped onto a 35 mm DIN rail in accordance with EN 60715)
Typical current consumption	25 mA (24 V DC)
	54 mA (12 V DC)

Power consumption	≤ 800 mW (at 9.6 V DC)

Input data

Signal: Current

Number of inputs	1
Configurable/programmable	no
Current input signal	0 mA ... 20 mA
	4 mA ... 20 mA
Input resistance current input	approx. 63 Ω (+0.7 V for test diode)

Output data

Signal: Current

Number of outputs	1
Configurable/programmable	no
Open-circuit voltage	< 17 V
Current output signal	0 mA ... 20 mA
	4 mA ... 20 mA
Max. current output signal	22 mA
Load/output load current output	≤ 600 Ω (at 20 mA)
Ripple	< 20 mV_{PP} (at 600 Ω)

Connection data

Connection method	Screw connection
Stripping length	10 mm
Screw thread	M3
Conductor cross-section rigid	0.2 mm² ... 1.5 mm² (with ferrule)
	0.14 mm² ... 2.5 mm² (without ferrule)
Conductor cross-section flexible	0.14 mm² ... 2.5 mm²
Conductor cross-section AWG	24 ... 12 (flexible)
Tightening torque	0.5 Nm ... 0.6 Nm

Ex data

Ex installation (EPL)	Gc
	Div. 2

Signaling

Status display	Green LED (supply voltage)

Dimensions

Width	6.2 mm
Height	109.81 mm
Depth	119.2 mm

Material specifications

Color	gray (RAL 7042)
Housing material	PBT
Fire protection for rail vehicles (DIN EN 45545-2) R22	HL 1 - HL 2
Fire protection for rail vehicles (DIN EN 45545-2) R23	HL 1 - HL 2
Fire protection for rail vehicles (DIN EN 45545-2) R24	HL 1 - HL 2

Environmental and real-life conditions

Ambient conditions

Degree of protection	IP20 (not assessed by UL)
Ambient temperature (operation)	-40 °C ... 70 °C
Ambient temperature (storage/transport)	-40 °C ... 85 °C
Altitude	≤ 2000 m
Permissible humidity (operation)	5 % ... 95 % (non-condensing)

Approvals

CE

Certificate	CE-compliant

ATEX

Identification	Ⓔx II 3 G Ex ec IIC T4 Gc
Certificate	BVS 19 ATEX E 047 X

IECEx

Identification	Ex ec IIC T4 Gc
Certificate	IECEx BVS 19.0041X

CCC / China-Ex

Identification	Ex ec IIC T4 Gc

UL, USA/Canada

Identification	UL 508 Listed
	Class I, Div. 2, Groups A, B, C, D T6
	Class I, Zone 2, Group IIC T6

Shipbuilding approval

Certificate	DNV GL TAA00002UA

EMC data

Electromagnetic compatibility	Conformance with EMC directive
Noise immunity	EN 61000-6-2
Note	When being exposed to interference, there may be minimal deviations.

Noise emission

Standards/regulations	EN 61000-6-4

Electrostatic discharge

Standards/regulations	EN 61000-4-2

Electrostatic discharge

Comments	Safety measures must be taken to prevent electrostatic discharge.

Electromagnetic HF field

Designation	Electromagnetic RF field
Standards/regulations	EN 61000-4-3

Fast transients (burst)

Designation	Fast transients (burst)
Standards/regulations	EN 61000-4-4

Surge current load (surge)

Standards/regulations	EN 61000-4-5

Conducted interference

Designation	Conducted interferences
Standards/regulations	EN 61000-4-6

Standards and regulations

Electrical isolation	3-way isolation

GB Standard

Standards/regulations	GB/T 3836.1
	GB/T 3836.3
	GB/T 3836.4

Mounting

Mounting type	DIN rail mounting
Assembly note	The DIN rail connector can be used for bridging the supply voltage. It can be snapped onto a 35 mm EN 60715 DIN rail.
Mounting position	any

Drawings

Block diagram

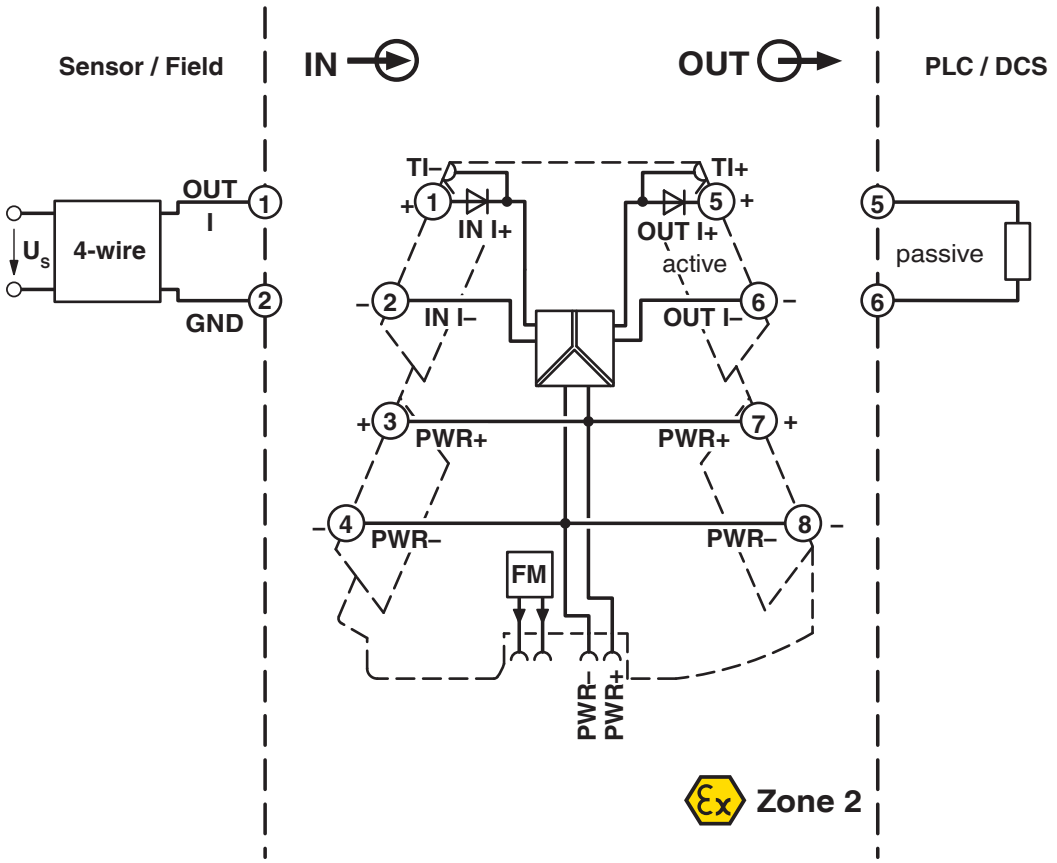

Approvals

To download certificates, visit the product detail page: https://www.phoenixcontact.com/us/products/2901998

UL Listed
Approval ID: FILE E 238705

cUL Listed
Approval ID: FILE E 238705

DNV
Approval ID: TAA00002UA

IECEx
Approval ID: IECEx BVS 19.0041X

cUL Listed
Approval ID: E196811

UL Listed
Approval ID: E196811

ATEX
Approval ID: BVS 19 ATEX E 047 X

EAC Ex
Approval ID: TP012 103.01 00079

CCC
Approval ID: 2022122310115961

Classifications

ECLASS

ECLASS-13.0	27210120
ECLASS-15.0	27210120

ETIM

ETIM 10.0	EC002653

UNSPSC

UNSPSC 21.0	39121000

Environmental product compliance

EU RoHS

Fulfills EU RoHS substance requirements	Yes
Exemption	7(a), 7(c)-I

China RoHS

Environment friendly use period (EFUP)	EFUP-50
	An article-related China RoHS declaration table can be found in the download area for the respective article under "Manufacturer declaration". For all articles with EFUP-E, no China RoHS declaration table issued and required.

EU REACH SVHC

REACH candidate substance (CAS No.)	Lead(CAS: 7439-92-1)
	2,2',6,6'-tetrabromo-4,4'-isopropylidenediphenol(CAS: 79-94-7)
SCIP	3e74e815-67a5-4de8-b597-b848a1a02d9c

Phoenix Contact 2026 © - all rights reserved
https://www.phoenixcontact.com

Phoenix Contact USA
586 Fulling Mill Road
Middletown, PA 17057, United States
(+717) 944-1300
info@phoenixcon.com