EM-ETH-GATEWAY-IFS - Data interface

2901988

https://www.phoenixcontact.com/us/products/2901988

Please be informed that the data shown in this PDF document is generated from our online catalog. Please find the complete data in the user documentation. Our general terms of use for downloads are valid.

CRA-READY



Gateway for the connection of up to 32 Interface system devices to a higher-level controller via EtherNet/IP™. The Interface system devices are connected to the gateway via DIN rail connectors. The DIN rail connectors are provided.

Commercial data

Item number	2901988
Packing unit	1 pc
Minimum order quantity	1 pc
Sales key	C477
Product key	DK7712
GTIN	4046356641937
Weight per piece (including packing)	165.69 g
Weight per piece (excluding packing)	165.689 g
Customs tariff number	85176200
Country of origin	DE

Technical data

Notes

Note on application

Note on application	As things stand now, we are preparing the product so that, as of December 11, 2027, it will comply with the requirements of the EU Cyber Resilience Act (CRA) based on the information currently available regarding the CRA.

Utilization restriction

EMC note	EMC: class A product, see manufacturer's declaration in the download area

Product properties

Product type	Gateways/Proxies
Operating mode	100% operating factor

Insulation characteristics

Overvoltage category	III
Pollution degree	2

Input data

Digital

Number	8
Rated actuating voltage U_C	24 V DC ±20 %
Rated actuating current I_C	3 mA
Protective circuit	Reverse polarity protection
	Surge protection

Output data

Digital: Switching outputs

Number	4
Residual voltage	1 V
Maximum switching voltage	23 V DC (U_B - $U_{resid.}$ of the output)
Max. switching current	500 mA
Protective circuit	Parallel protection against polarity reversal, pay attention to the fuse (Fusing with max. 8 A F-fuse)

Connection data

Supply

Connection method	Push-in connection
Stripping length	10 mm
Conductor cross-section rigid	0.2 mm² ... 2.5 mm²
Conductor cross-section flexible	0.2 mm² ... 2.5 mm²

Conductor cross-section AWG	24 ... 12

Input

Connection method	Push-in connection
Stripping length	10 mm
Conductor cross-section rigid	0.2 mm² ... 2.5 mm²
Conductor cross-section flexible	0.2 mm² ... 2.5 mm²
Conductor cross-section AWG	24 ... 12

Output

Connection method	Push-in connection
Stripping length	10 mm
Conductor cross-section rigid	0.2 mm² ... 2.5 mm²
Conductor cross-section flexible	0.2 mm² ... 2.5 mm²
Conductor cross-section AWG	24 ... 12

INTERFACE system

Connection method	DIN rail bus connector
Number of connections	1
Number of positions	5

Programming connection

Connection method	S-PORT (socket)
Number of connections	1
Number of positions	12

Ethernet/IP™

Connection method	RJ45
Number of connections	1

Interfaces

Data: Network interface

Communication protocol	EtherNet/IP™
Connection method	RJ45 jack
Number of connections	1
Transmission speed	10 Mbps
	100 Mbps

Data: Service interface

Communication protocol	Interface-System
Connection method	S-PORT (socket)
Number of connections	1
Number of positions	12

Data: Device bus

Communication protocol	Interface-System
Connection method	DIN rail bus connector

Number of connections	1
Number of positions	5
Transmission speed	76.8 kbps

Dimensions

Width	22.5 mm
Height	107.8 mm
Depth	113.8 mm

Material specifications

Color	gray (RAL 7042)
Housing material	Polyamide PA non-reinforced

Environmental and real-life conditions

Ambient conditions

Degree of protection	IP20
Ambient temperature (operation)	-25 °C ... 50 °C
Ambient temperature (storage/transport)	-35 °C ... 80 °C

Standards and regulations

Standards/regulations	EN 61000-6-2
	EN 61000-6-4

Mounting

Mounting type	DIN rail mounting
Assembly note	in rows with zero spacing
Mounting position	any

Drawings

Block diagram

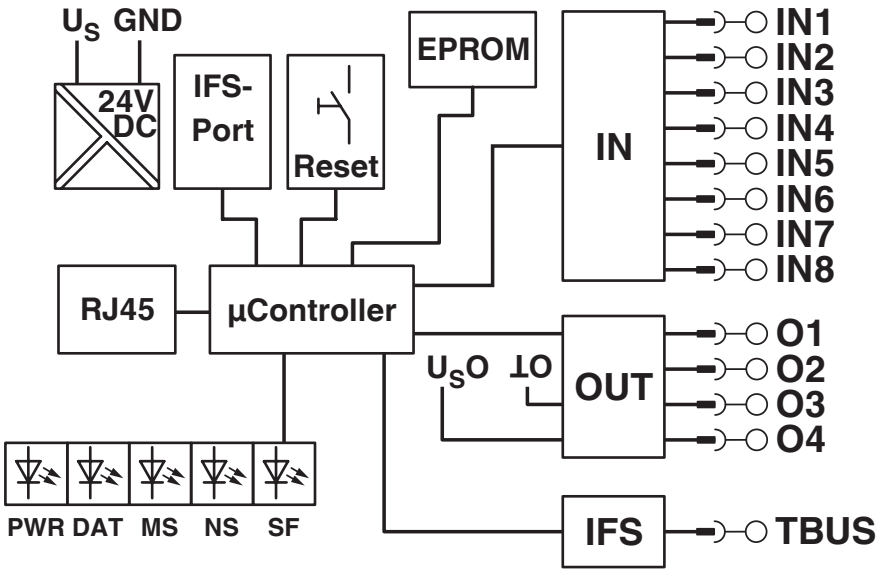

Approvals

To download certificates, visit the product detail page: https://www.phoenixcontact.com/us/products/2901988

UL Listed
Approval ID: E140324

cUL Listed
Approval ID: E140324

Classifications

ECLASS

ECLASS-13.0	27242608
ECLASS-15.0	27242608

ETIM

ETIM 10.0	EC001604

UNSPSC

UNSPSC 21.0	32151600

Environmental product compliance

EU RoHS

Fulfills EU RoHS substance requirements	Yes
Exemption	7(a), 7(a)-I, 7(c)-I

China RoHS

Environment friendly use period (EFUP)	EFUP-50
	An article-related China RoHS declaration table can be found in the download area for the respective article under "Manufacturer declaration". For all articles with EFUP-E, no China RoHS declaration table issued and required.

EU REACH SVHC

REACH candidate substance (CAS No.)	Lead(CAS: 7439-92-1)
SCIP	43e371fd-458f-417c-a5f0-1e6c94c90ec8

Phoenix Contact 2026 © - all rights reserved
https://www.phoenixcontact.com

Phoenix Contact USA
586 Fulling Mill Road
Middletown, PA 17057, United States
(+717) 944-1300
info@phoenixcon.com