# FL-PP-RJ45-LSA - Patch panel

2901645

https://www.phoenixcontact.com/us/products/2901645

Please be informed that the data shown in this PDF document is generated from our online catalog. Please find the complete data in the user documentation. Our general terms of use for downloads are valid.



Patch panel, one RJ45 jack to 8 LSA connection terminal blocks (1:1 assignment), CAT5e, 10/100/1000 Mbps, DIN rail adapter, IP20, option of shield contacting to the DIN rail via bridges

## Product description

Ethernet patch panels enable quick and easy connection between the field cabling and control cabinet cabling. The passive termination panels are a convenient alternative to the on-site assembly of RJ45 connectors.

## Your advantages

- Safe shield connection to ground potential
- CAT5e
- Mounting on a DIN rail
- 10/100/1000 Mbps
- Optional shield connection via jumpers
- Shipbuilding approval in accordance with DNV GL
- PoE-capable in accordance with IEEE 802.3bt, type 4

## Commercial data

| | |
|---|---|
| Item number | 2901645 |
| Packing unit | 10 pc |
| Minimum order quantity | 1 pc |
| Sales key | DN07 |
| Product key | DNC331 |
| GTIN | 4046356622790 |

| | |
|---|---|
| Weight per piece (including packing) | 52.9 g |
| Weight per piece (excluding packing) | 56 g |
| Customs tariff number | 85366990 |
| Country of origin | US |

## Technical data

### Notes

Note on application

| | |
|---|---|
| Note on application | Only for industrial use |

### Product properties

| | |
|---|---|
| Product type | Patch panel |
| MTBF | 6702 Years (Telcordia standard, 25°C temperature, 21% operating cycle (5 days a week, 8 hours a day)) |
| | 2962 Years (Telcordia standard, 40°C temperature, 34.25% operating cycle (5 days a week, 12 hours a day)) |

### Connection data

| | |
|---|---|
| Connection method | LSA-PLUS |

### Interfaces

Data: Ethernet interface, 10/100/1000Base-T(X) in accordance with IEEE 802.3

| | |
|---|---|
| Serial transmission speed | 10/100/1000 Mbps |
| Connection method | LSA |
| No. of channels | 1 |
| Pin assignment | 1:1 |
| Transmission length | 100 m (including patch cables) |
| Single conductor/terminal point, rigid | 0.128 mm² ... 0.325 mm² |
| Single-wire/terminal point, flexible | 0.128 mm² ... 0.325 mm² |
| Max. AWG conductor cross-section, flexible | 22 |
| Min. AWG conductor cross-section, flexible | 26 |

Data: Ethernet interface, 10/100/1000Base-T(X) in accordance with IEEE 802.3

| | |
|---|---|
| Connection method | RJ45 CAT5e |
| No. of channels | 1 |

### Dimensions

| | |
|---|---|
| Dimensional drawing | 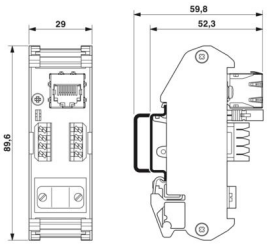 |
| Width | 29 mm |
| Height | 90 mm |
| Depth | 53 mm |

## Material specifications

| | |
|---|---|
| Color (Housing) | green (RAL 6021) |
| Material (Housing) | PVC / PA |

## Cable/line

| | |
|---|---|
| External cable diameter | 6 mm ... 10 mm |
| Cable impedance | 100 Ω |

## Mechanical properties

Mechanical data

| | |
|---|---|
| Insertion/withdrawal cycles | ≤ 2500 |

## Mechanical tests

| | |
|---|---|
| Vibration resistance in accordance with EN 60068-2-6/IEC 60068-2-6 | Operation: 5g, 10...150 Hz, 2.5 h, in XYZ direction |
| Shock in accordance with EN 60068-2-27/IEC 60068-2-27 | Operation: 25g, 11 ms period, half-sine shock pulse |

## Environmental and real-life conditions

Ambient conditions

| | |
|---|---|
| Degree of protection | IP20 |
| Ambient temperature (operation) | -25 °C ... 70 °C |
| Ambient temperature (storage/transport) | -25 °C ... 85 °C |
| Ambient temperature (assembly) | -10 °C ... 70 °C |
| Permissible humidity (operation) | 25 % ... 95 % (non-condensing) |

## Approvals

CE

| | |
|---|---|
| Identification | CE-compliant |

Corrosive gas test

| | |
|---|---|
| Identification | ISA-S71.04-1985 G3 Harsh Group A |

Shipbuilding

| | |
|---|---|
| Identification | DNV GL |

Shipbuilding data

| | |
|---|---|
| Temperature | B |
| Humidity | A |
| Vibration | A |
| EMC | B |
| Enclosure | Required protection according to the Rules shall be provided upon installation on board |

## Mounting

| | |
|---|---|
| Mounting type | DIN rail mounting |

## Drawings

Dimensional drawing

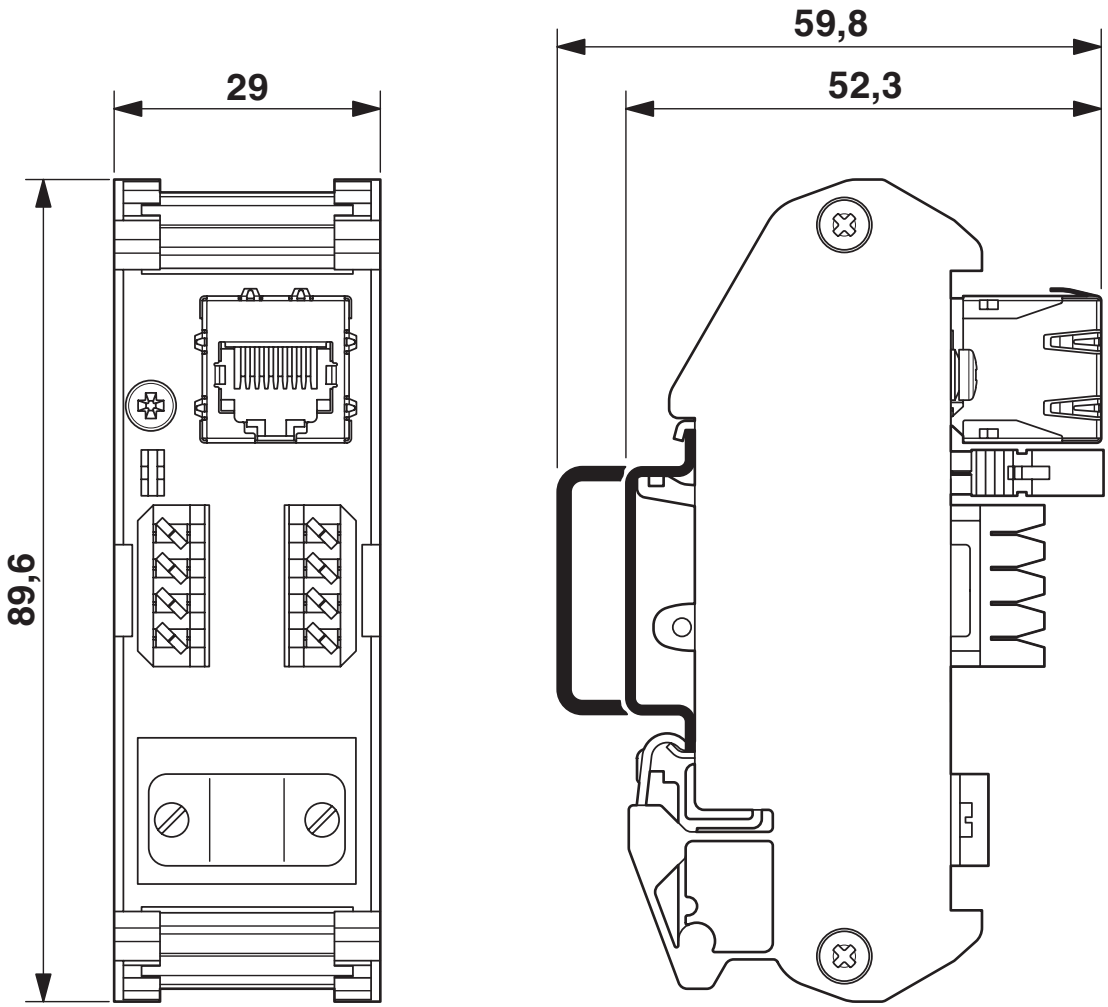


Dimensional drawing

Schematic diagram

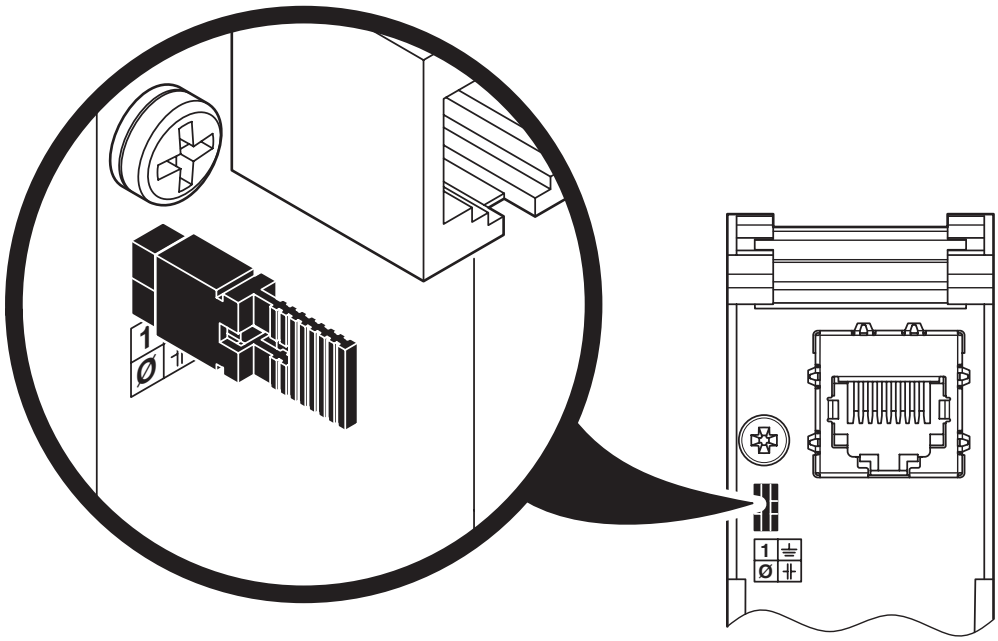

Shield connection direct to PE

Schematic diagram

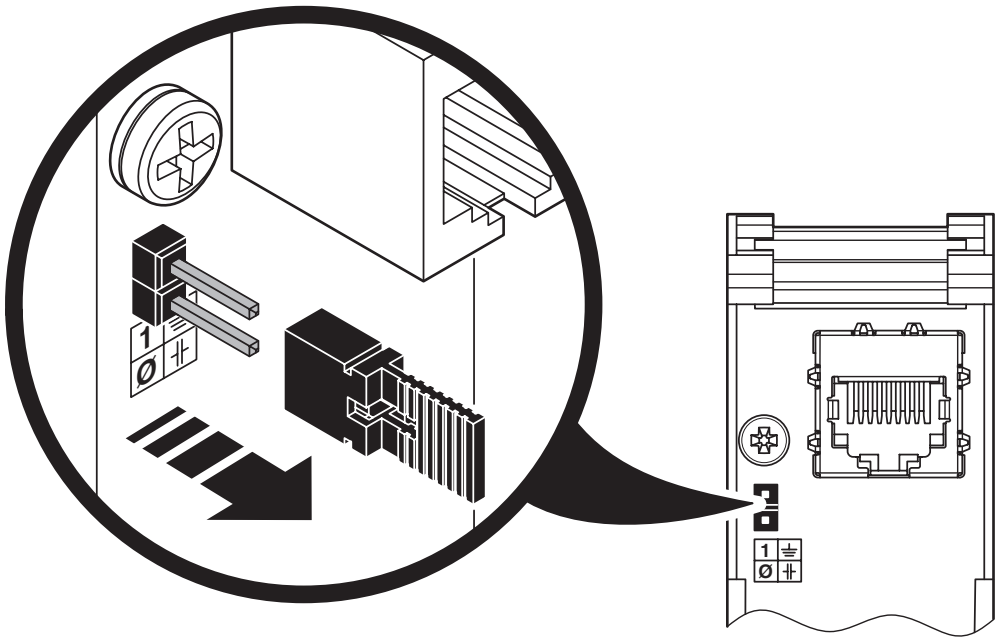

Shield connection to PE via RC element

Circuit diagram

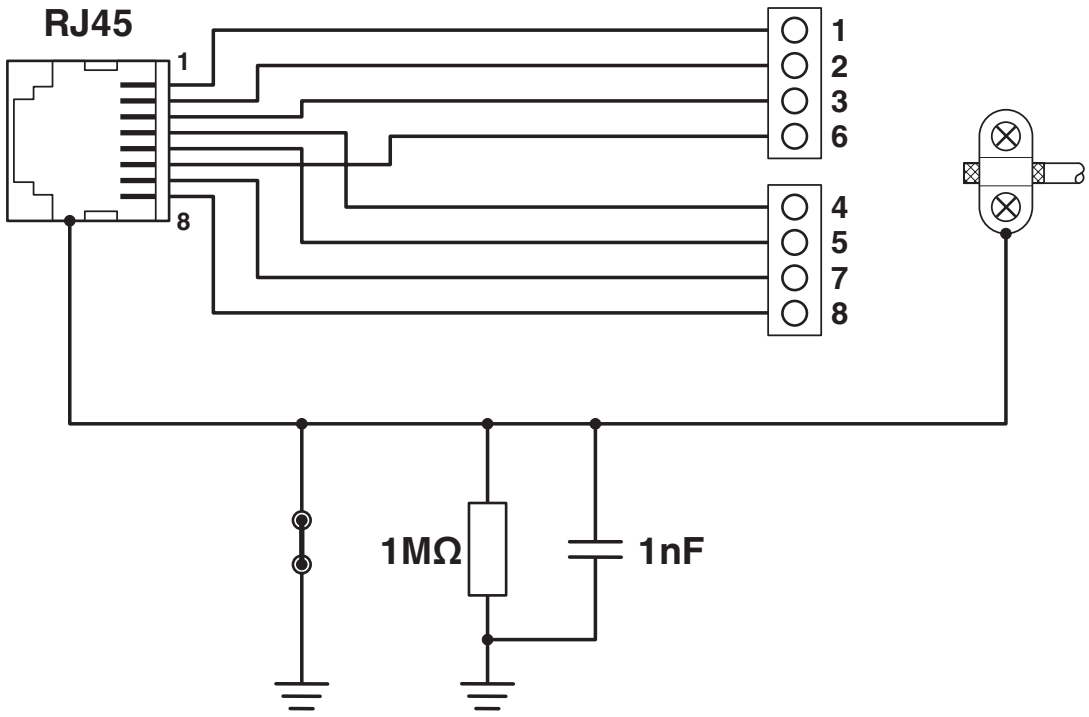


Circuit diagram

## Approvals

To download certificates, visit the product detail page: https://www.phoenixcontact.com/us/products/2901645

**DNV GL**
Approval ID: TAA00001KR_7

## Classifications

### ECLASS

| | |
|---|---|
| ECLASS-13.0 | 19170112 |
| ECLASS-15.0 | 19170112 |

### ETIM

| | |
|---|---|
| ETIM 10.0 | EC001128 |

### UNSPSC

| | |
|---|---|
| UNSPSC 21.0 | 43223300 |

## Environmental product compliance

EU RoHS

| | |
|---|---|
| Fulfills EU RoHS substance requirements | Yes, No exemptions |

China RoHS

| | |
|---|---|
| Environment friendly use period (EFUP) | EFUP-50 |
| | An article-related China RoHS declaration table can be found in the download area for the respective article under "Manufacturer declaration". For all articles with EFUP-E, no China RoHS declaration table issued and required. |

EU REACH SVHC

| | |
|---|---|
| REACH candidate substance (CAS No.) | No substance above 0.1 wt% |


Phoenix Contact 2026 © - all rights reserved
https://www.phoenixcontact.com



Phoenix Contact USA
586 Fulling Mill Road
Middletown, PA 17057, United States
(+717) 944-1300
info@phoenixcon.com