RAD-AI4-IFS - I/O extension module

2901537

https://www.phoenixcontact.com/us/products/2901537

Please be informed that the data shown in this PDF document is generated from our online catalog. Please find the complete data in the user documentation. Our general terms of use for downloads are valid.

CRA-READY

Radioline - I/O extension module, 4 analog current inputs (0/4 mA ... 20 mA). Product is being prepared for compliance with the Cyber Resilience Act (CRA).

Your advantages

- Easy startup via thumbwheel
- Channel-to-channel electrical isolation
- Extended temperature range of -40 °C … +70 °C
- Easy module replacement even during operation (hot swap)
- Approved for use in zone 2

ELEKTROGERÄTE RÜCKNAHME

Commercial data

Item number	2901537
Packing unit	1 pc
Minimum order quantity	1 pc
Sales key	DN26
Product key	DNC61D
GTIN	4046356610476

Weight per piece (including packing)	172.65 g
Weight per piece (excluding packing)	126.82 g
Customs tariff number	85177900
Country of origin	DE

Set consists of

ME 17,5 TBUS 1,5/ 5-ST-3,81 KMGY - DIN rail bus connector

2713645

https://www.phoenixcontact.com/us/products/2713645

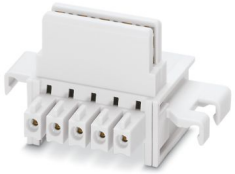

DIN rail bus connector, color: light gray, nominal current: 8 A (parallel contacts), rated voltage (III/2): 125 V, number of positions: 5, product range: TBUS5-17,5.., pitch: 3.81 mm, mounting: DIN rail mounting, locking: without, mounting method: without, type of packaging: packed in cardboard, Item with gold-plated contacts, bus connectors for connecting with electronics housings, 5 parallel contacts

Technical data

Notes

Note on application

Note on application	Only for industrial use
Note on application	As things stand now, we are preparing the product so that, as of December 11, 2027, it will comply with the requirements of the EU Cyber Resilience Act (CRA) based on the information currently available regarding the CRA.

Product properties

Product type	Extension module
MTTF	771 Years (SN 29500 standard, temperature 25°C, operating cycle 21%)
	351 Years (SN 29500 standard, temperature 40°C, operating cycle 34.25%)
	136 Years (SN 29500 standard, temperature 40°C, operating cycle 100%)

Insulation characteristics

Overvoltage category	II
Degree of pollution	2

Electrical properties

Rated insulation voltage	60 V (In accordance with EN/IEC 60079-7)
Electrical isolation	50 V (Rated insulation voltage (in each case between the analog inputs / TBUS supply, reinforced insulation in accordance with EN 61010))
	300 V (Rated insulation voltage (to adjacent devices, basic insulation in accordance with EN/IEC 61010))
Test voltage for analog I/Os	1.5 kV AC (50 Hz, 1 min.)
Maximum power dissipation for nominal condition	2.88 W
Transient surge protection	yes

Supply

Supply voltage range	19.2 V DC ... 30.5 V DC (DIN rail bus connector)
Max. current consumption	≤ 120 mA (At 24 V DC, at 25°C)

Input data

Analog

Description of the input	Analog input
Number of inputs	4
Current input signal	0 mA ... 20 mA (can be set via DIP switches)
	4 mA ... 20 mA (can be set via DIP switches)
Max. current input signal	22 mA
Input resistance current input	< 70 Ω

Resolution	16 bit
Precision	≤ 0.02 % (at 25 °C)
Protective circuit	Short-circuit and overload protection
Temperature coefficient, typical	0.0025 %/K (at -40 °C ... +70 °C)
Supply voltage	≥ 12 V DC (U_{ANA} via terminal block PWR1, +I1, for passive sensors, 25 mA)

Connection data

Tightening torque	0.5 Nm ... 0.6 Nm
	5 lb_f-in. ... 7 lb_f-in.
Connection method	Screw connection
Stripping length	7 mm
Conductor cross-section, rigid min.	0.2 mm²
Conductor cross-section, rigid max.	2.5 mm²
Conductor cross-section flexible min.	0.2 mm²
Conductor cross-section flexible max.	2.5 mm²
Conductor cross-section AWG min.	24
Conductor cross-section AWG max.	14
Tightening torque	0.5 Nm ... 0.6 Nm
	5 lb_f-in. ... 7 lb_f-in.

Signaling

Status display	LED supply voltage, PWR (green)
	Green LED (bus communication, DAT)
	LED periphery error, ERR (red)

Dimensions

Dimensional drawing	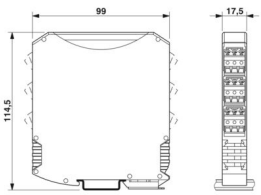
Width	17.5 mm
Height	113 mm
Depth	114.5 mm

Material specifications

Color (Housing)	gray (RAL 7042)
Material (Housing)	PA 6.6-FR
Flammability rating according to UL 94	V0

Environmental and real-life conditions

Ambient conditions

Degree of protection	IP20
Ambient temperature (operation)	-40 °C ... 70 °C (>55°C derating, see technical documentation)
	-40 °F ... 158 °F (>131°F derating, see technical documentation)
Ambient temperature (storage/transport)	-40 °C ... 85 °C
	-40 °F ... 185 °F
Altitude	2000 m
Permissible humidity (operation)	20 % ... 85 %
Permissible humidity (storage/transport)	20 % ... 85 %
Shock	16g, 11 ms
Vibration (operation)	in accordance with IEC 60068-2-6: 5g, 10 Hz ... 150 Hz

Approvals

CE

Certificate	CE-compliant

ATEX

Identification	Ⓔx II 3 G Ex ec IIC T4 Gc
Certificate	IBExU 15 ATEX B008 X
Note	Please follow the special installation instructions in the documentation!

IECEx

Identification	Ex ec IIC T4 Gc
Certificate	IECEx IBE 13.0019X

UL, USA/Canada

Identification	508 Listed
	Class I, Div. 2, Groups A, B, C, D T4A
	Class I, Zone 2, IIC T4

CCC / China-Ex

Identification	Ex ec IIC T4 Gc
Certificate	2022122310115625

KC approval for South Korea

Certificate	R-R-PCK-2901537

KC-s

Certificate	KTL 20-KA4BO-0147X

Corrosive gas test

Identification	ISA-S71.04-1985 G3 Harsh Group A

EMC data

Electromagnetic compatibility	Conformance with EMC Directive 2014/30/EU
Noise immunity	EN 61000-6-2

Noise emission

Standards/regulations	EN 61000-6-4

Standards and regulations

EMC

Standard designation	EMC – Immunity for industrial areas
Standards/specifications	EN 61000-6-2

EMC

Standard designation	EMC interference emissions for industrial environments
Standards/specifications	EN 61000-6-4

Explosive atmospheres

Standard designation	Ex areas, essential requirements
Standards/specifications	EN 60079-0

Explosive atmospheres

Standard designation	Ex areas, type of protection n
Standards/specifications	EN 60079-15

Mounting

Mounting type	DIN rail mounting
Assembly note	on standard DIN rail NS 35 in accordance with EN 60715
Mounting position	any
Useable DIN rail type	DIN rail: 35 mm

Drawings

Dimensional drawing

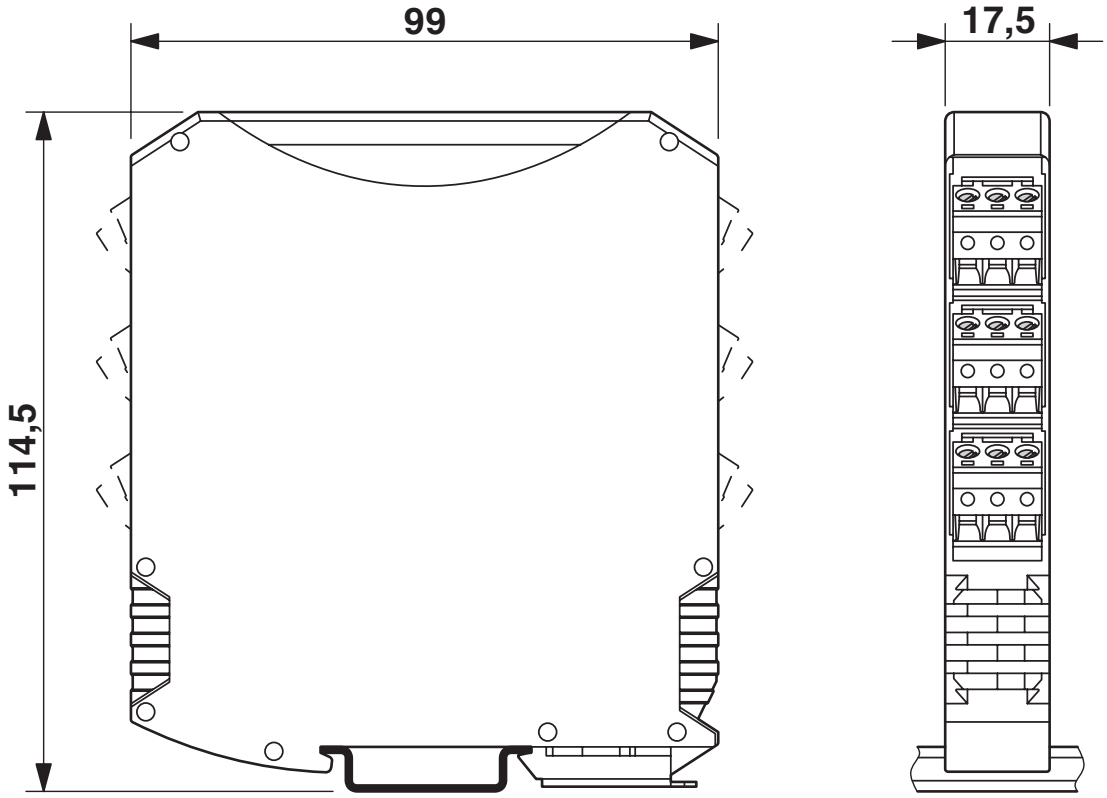

Slim design

Application drawing

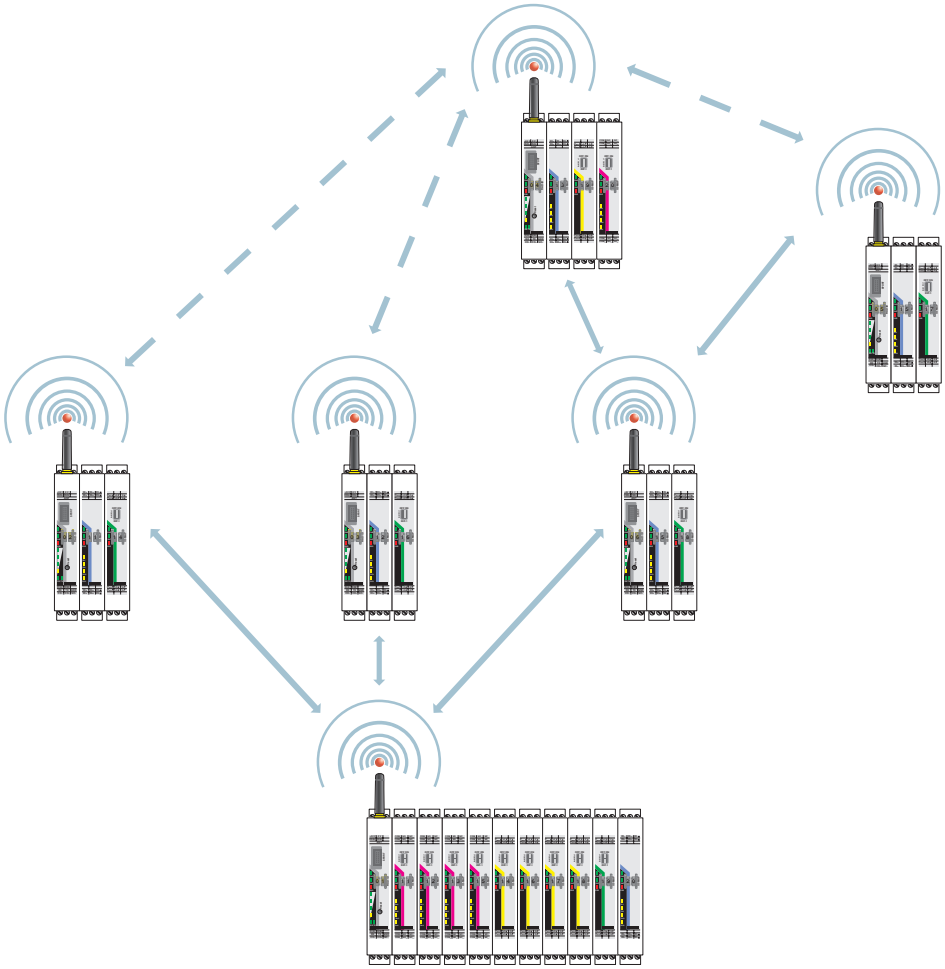

Wireless module in I/O data mode

Application drawing

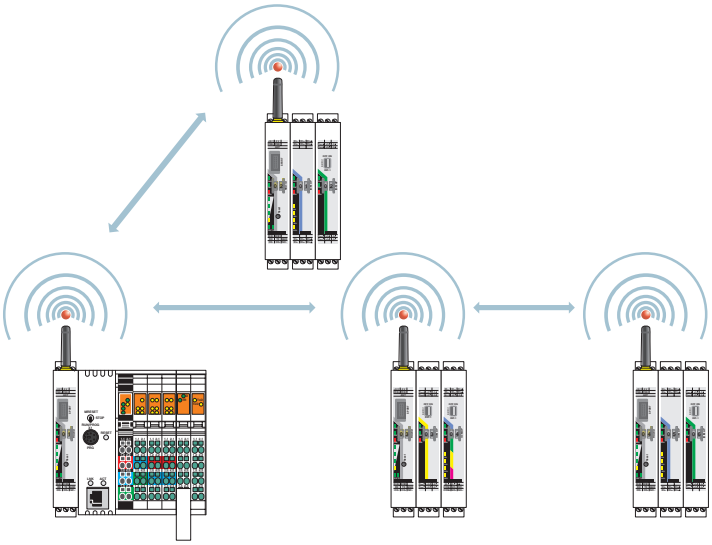

Wireless module in PLC/Modbus RTU mode

Application drawing

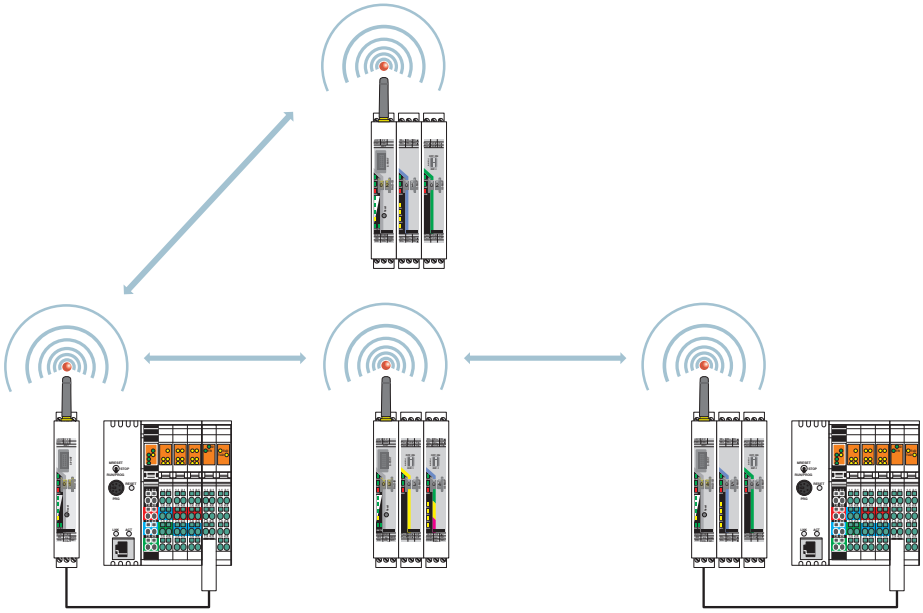

Wireless module in PLC/Modbus RTU dual mode

Functional drawing

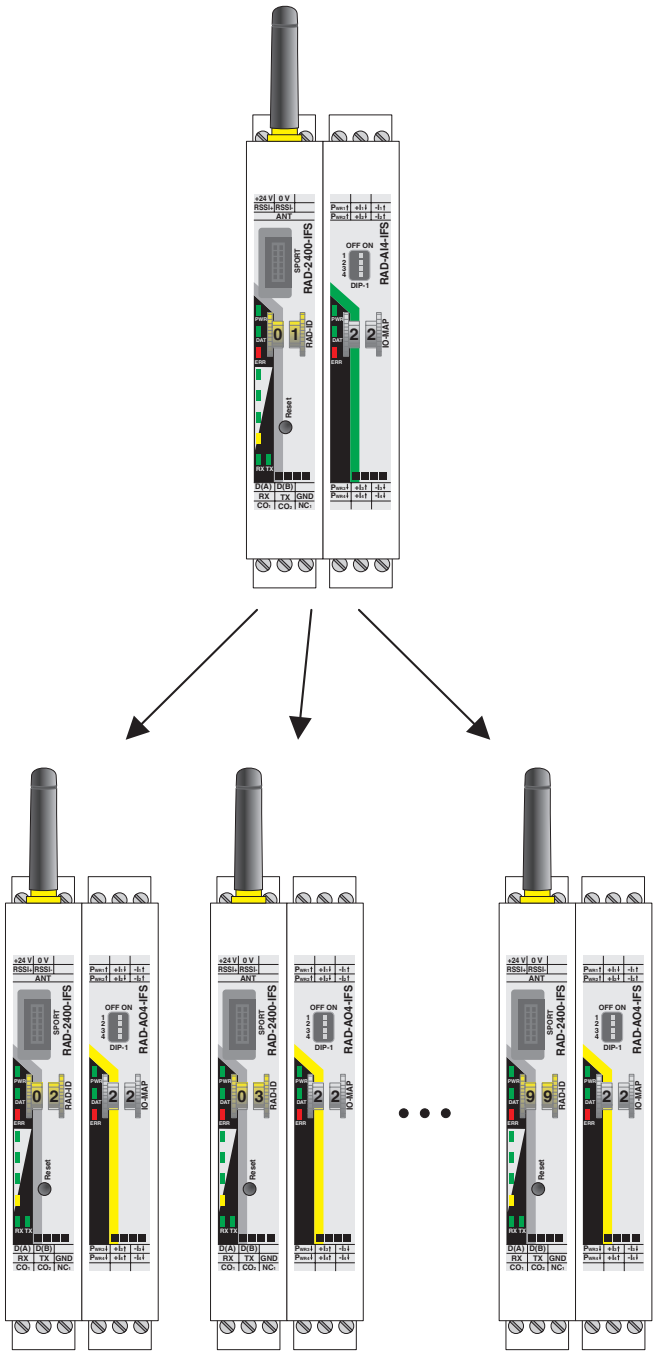

Assignment of analog inputs and analog outputs

Schematic diagram

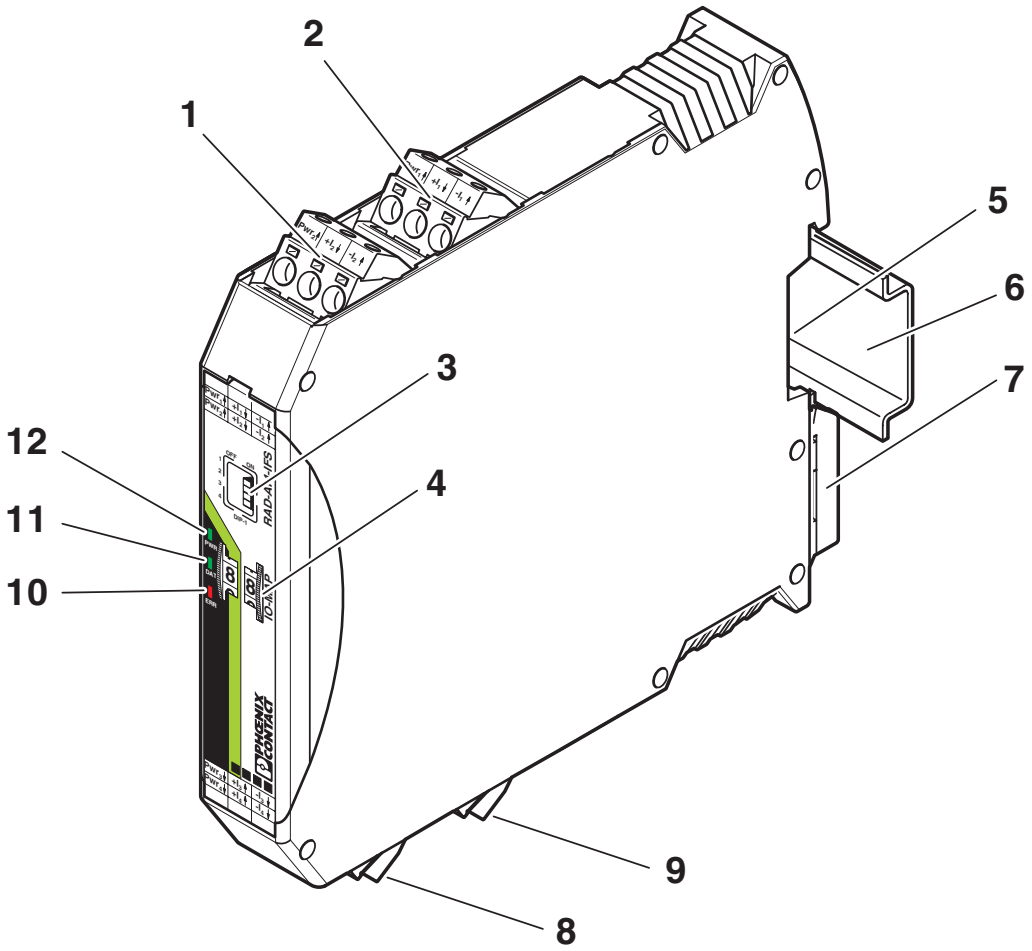

Function elements

Schematic diagram

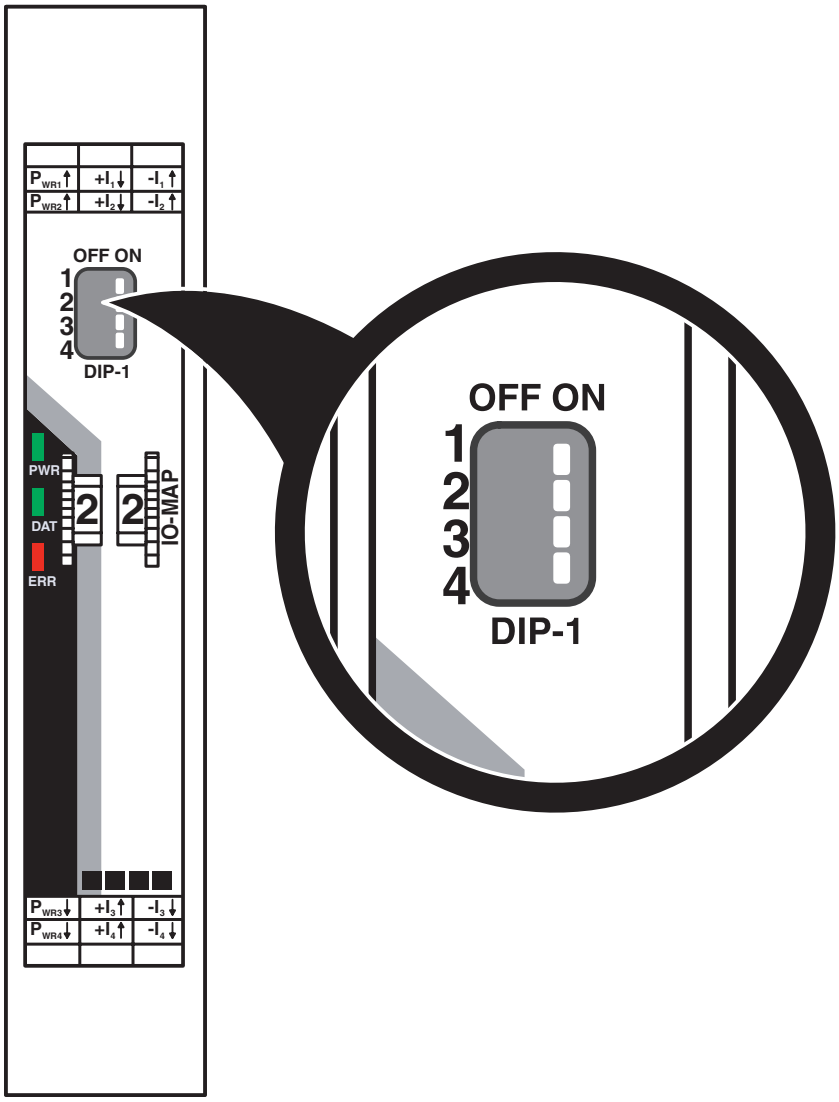

DIP switches

Schematic diagram

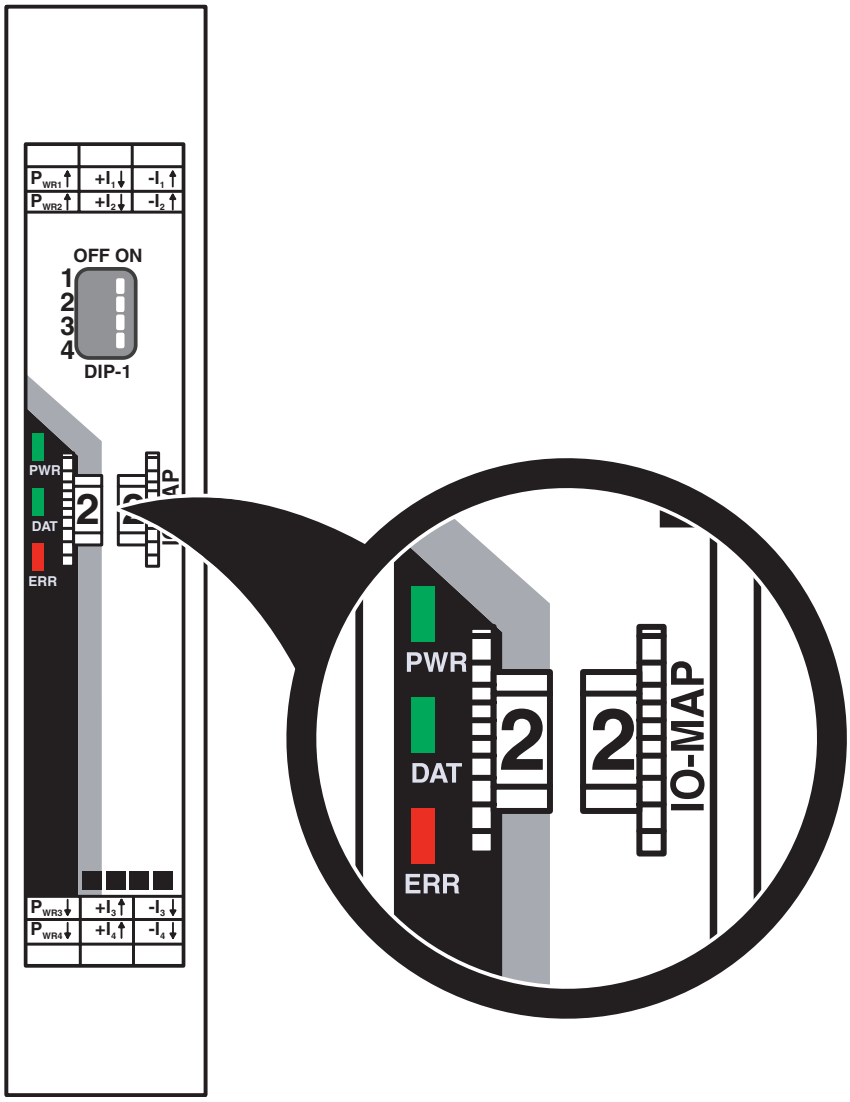

Thumbwheel

Circuit diagram

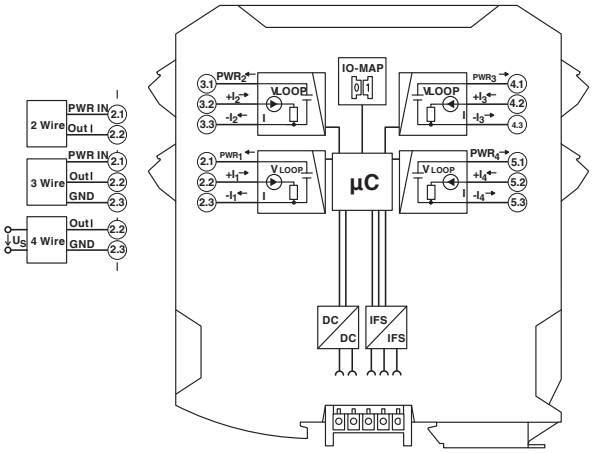

Basic circuit diagram

Approvals

To download certificates, visit the product detail page: https://www.phoenixcontact.com/us/products/2901537

UL Listed
Approval ID: E238705

cUL Listed
Approval ID: E238705

KC
Approval ID: R-R-PCK-2901537

IECEx
Approval ID: IECEx IBE 13.0019X

cUL Listed
Approval ID: E196811

UL Listed
Approval ID: E196811

ATEX
Approval ID: IBExU15ATEXB008 X

KC-s
Approval ID: 20-KA4BO-0147X

CCC
Approval ID: 2022122310115625

Classifications

ECLASS

ECLASS-13.0	27242601
ECLASS-15.0	27242601

ETIM

ETIM 10.0	EC001596

UNSPSC

UNSPSC 21.0	32151602

Environmental product compliance

EU RoHS

Fulfills EU RoHS substance requirements	Yes
Exemption	7(a), 7(c)-I

China RoHS

Environment friendly use period (EFUP)	EFUP-50
	An article-related China RoHS declaration table can be found in the download area for the respective article under "Manufacturer declaration". For all articles with EFUP-E, no China RoHS declaration table issued and required.

EU REACH SVHC

REACH candidate substance (CAS No.)	Lead(CAS: 7439-92-1)
SCIP	c9c5fc4a-7834-46f4-b65e-aa724c900740

Phoenix Contact 2026 © - all rights reserved
https://www.phoenixcontact.com

Phoenix Contact USA
586 Fulling Mill Road
Middletown, PA 17057, United States
(+717) 944-1300
info@phoenixcon.com