RAD-DAIO6-IFS - I/O extension module

2901533

https://www.phoenixcontact.com/us/products/2901533

Please be informed that the data shown in this PDF document is generated from our online catalog. Please find the complete data in the user documentation. Our general terms of use for downloads are valid.

CRA-READY

Radioline - I/O extension module, 2 digital inputs and outputs (0 V AC/DC ... 250 V AC/DC) and 1 analog input (0/4 mA ... 20 mA) and output (0/4 mA ... 20 mA, 0 V ... 10 V). Product is being prepared for compliance with the Cyber Resilience Act (CRA).

Your advantages

- Easy startup via thumbwheel
- Channel-to-channel electrical isolation
- Extended temperature range of -40 °C … +70 °C
- Easy module replacement even during operation (hot swap)
- Approved for use in zone 2
- Digital wide-range inputs/outputs (0 ...250 V AC/DC)

ELEKTROGERÄTE RÜCKNAHME

Commercial data

Item number	2901533
Packing unit	1 pc
Minimum order quantity	1 pc
Sales key	DN26
Product key	DNC61D

GTIN	4046356610216
Weight per piece (including packing)	199 g
Weight per piece (excluding packing)	140.13 g
Customs tariff number	85177900
Country of origin	DE

Set consists of

ME 17,5 TBUS 1,5/ 5-ST-3,81 KMGY - DIN rail bus connector

2713645

https://www.phoenixcontact.com/us/products/2713645

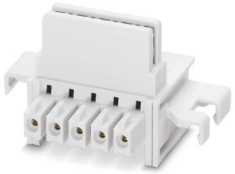

DIN rail bus connector, color: light gray, nominal current: 8 A (parallel contacts), rated voltage (III/2): 125 V, number of positions: 5, product range: TBUS5-17,5.., pitch: 3.81 mm, mounting: DIN rail mounting, locking: without, mounting method: without, type of packaging: packed in cardboard, Item with gold-plated contacts, bus connectors for connecting with electronics housings, 5 parallel contacts

Technical data

Notes

Note on application

Note on application	Only for industrial use
Note on application	As things stand now, we are preparing the product so that, as of December 11, 2027, it will comply with the requirements of the EU Cyber Resilience Act (CRA) based on the information currently available regarding the CRA.

Product properties

Product type	Extension module
MTTF	889 Years (SN 29500 standard, temperature 25°C, operating cycle 21%)
	391 Years (SN 29500 standard, temperature 40°C, operating cycle 34.25%)
	151 Years (SN 29500 standard, temperature 40°C, operating cycle 100%)

Insulation characteristics

Overvoltage category	II
Degree of pollution	2

Electrical properties

Electrical isolation	300 V (Rated insulation voltage (in each case between the digital inputs // digital outputs // TBUS supply, reinforced insulation in accordance with EN/IEC 61010))
	50 V (Rated insulation voltage (in each case between the analog inputs / analog outputs / TBUS supply, reinforced insulation in accordance with EN/IEC 61010))
	300 V (Rated insulation voltage (in each case between the digital inputs and outputs // analog inputs and outputs, reinforced insulation in accordance with EN/IEC 61010))
	300 V (Rated insulation voltage (to adjacent devices, basic insulation in accordance with EN/IEC 61010))
Test voltage for digital I/Os	2.5 kV AC (50 Hz, 1 min.)
Test voltage for analog I/Os	1.5 kV AC (50 Hz, 1 min.)
Maximum power dissipation for nominal condition	2.28 W
Transient surge protection	yes

Supply

Supply voltage range	19.2 V DC ... 30.5 V DC (DIN rail bus connector)
Max. current consumption	≤ 95 mA (At 24 V DC, at 25°C)

Input data

Digital

Max. current consumption	< 1 mA

Analog

Description of the input	Analog input
Number of inputs	1
Current input signal	0 mA ... 20 mA (can be set via DIP switches)
	4 mA ... 20 mA (can be set via DIP switches)
Max. current input signal	22 mA
Input resistance current input	< 70 Ω
Resolution	16 bit
Precision	≤ 0.02 % (at 25 °C)
Protective circuit	Short-circuit and overload protection
Temperature coefficient, typical	typ. 0.0025 %/K (at -40 °C ... +70 °C)
Supply voltage	12 V DC (U_{ANA} via terminal block PWR1, +I1, for passive sensors, 25 mA)

Digital

Description of the input	Digital input
Number of inputs	2
Voltage input signal	0 V AC/DC ... 250 V AC/DC
Switching level "0" signal	0 V AC/DC ... 4 V AC/DC (Low-voltage input)
	0 V AC/DC ... 20 V AC/DC (High-voltage input)
Switching level "1" signal	10 V AC/DC ... 50 V AC/DC (Low-voltage input)
	50 V AC/DC ... 250 V AC/DC (High-voltage input)
Input frequency	≤ 2 Hz

Output data

Digital

Output name	Relay output
Number of outputs	2
Contact switching type	Changeover contact
Contact material	$AgSnO_2$
Maximum switching voltage	250 V AC/DC
Min. switching current	≥ 10 mA
Max. switching current	2 A (250 V AC)
	0.168 A (250 V DC)
	2 A (24 V DC)
Mechanical service life	1x 10^7 cycles
Electrical service life	2x 10^5 cycles (At 2 A, 250 V AC, cosφ 0.4)
	2x 10^5 cycles (At 1 A, 24 V DC, L/R = 48 ms)
Maximum switching frequency	2 Hz
Behavior of the outputs (adjustable via DIP switch)	Hold / Reset

Analog

Output name	Analog output
Number of outputs	1

Voltage output signal	0 V ... 10 V
Max. voltage output signal	~ 10.83 V
Current output signal	0 mA ... 20 mA
	4 mA ... 20 mA
Max. current output signal	~ 21.67 mA
Load	≥ 10 kΩ
	≤ 500 Ω
Resolution	16 bit
Precision	≤ 0.02 % (at 25 °C)
	typ. 0.5 % (Voltage output)
Temperature coefficient, typical	typ. 0.0025 %/K (at -40 °C ... +70 °C)
Protective circuit	Transient protection of outputs

Connection data

Tightening torque	0.5 Nm ... 0.6 Nm
	5 lb_f-in. ... 7 lb_f-in.
Connection method	Screw connection
Stripping length	7 mm
Conductor cross-section, rigid min.	0.2 mm²
Conductor cross-section, rigid max.	2.5 mm²
Conductor cross-section flexible min.	0.2 mm²
Conductor cross-section flexible max.	2.5 mm²
Conductor cross-section AWG min.	24
Conductor cross-section AWG max.	14
Tightening torque	0.5 Nm ... 0.6 Nm
	5 lb_f-in. ... 7 lb_f-in.

Signaling

Status display	LED supply voltage, PWR (green)
	Green LED (bus communication, DAT)
	LED periphery error, ERR (red)
	Yellow LED (digital input, DI1)
	Yellow LED (digital input, DI2)
	Yellow LED (digital output, DO1)
	Yellow LED (digital output, DO2)

Dimensions

Dimensional drawing	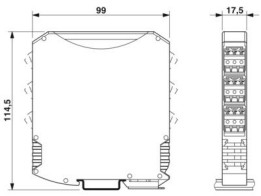
Width	17.5 mm
Height	113 mm
Depth	114.5 mm

Material specifications

Color (Housing)	gray (RAL 7042)
Material (Housing)	PA 6.6-FR
Flammability rating according to UL 94	V0

Environmental and real-life conditions

Ambient conditions

Degree of protection	IP20
Ambient temperature (operation)	-40 °C ... 70 °C (>55°C derating, see technical documentation)
	-40 °F ... 158 °F (>131°F derating, see technical documentation)
Ambient temperature (storage/transport)	-40 °C ... 85 °C
	-40 °F ... 185 °F
Altitude	2000 m
Permissible humidity (operation)	20 % ... 85 %
Permissible humidity (storage/transport)	20 % ... 85 %
Shock	16g, 11 ms
Vibration (operation)	in accordance with IEC 60068-2-6: 5g, 10 Hz ... 150 Hz

Approvals

CE

Certificate	CE-compliant

ATEX

Identification	Ⓔx II 3 G Ex ec nC IIC T4 Gc
Certificate	IBExU 15 ATEX B008 X
Note	Please follow the special installation instructions in the documentation!

IECEx

Identification	Ex ec nC IIC T4 Gc
Certificate	IECEx IBE 13.0019X

UL, USA/Canada

Identification	508 Listed
	Class I, Div. 2, Groups A, B, C, D T4A
	Class I, Zone 2, IIC T4

CCC / China-Ex

Identification	Ex ec nC IIC T4 Gc
Certificate	2022122310115625

KC approval for South Korea

Certificate	R-R-PCK-2901533

Corrosive gas test

Identification	ISA-S71.04-1985 G3 Harsh Group A

EMC data

Electromagnetic compatibility	Conformance with EMC Directive 2014/30/EU

Standards and regulations

EMC

Standard designation	EMC – Immunity for industrial areas
Standards/specifications	EN 61000-6-2

EMC

Standard designation	EMC interference emissions for industrial environments
Standards/specifications	EN 61000-6-4

Explosive atmospheres

Standard designation	Ex areas, essential requirements
Standards/specifications	EN 60079-0

Explosive atmospheres

Standard designation	Ex areas, type of protection n
Standards/specifications	EN 60079-15

Mounting

Mounting type	DIN rail mounting
Assembly note	on standard DIN rail NS 35 in accordance with EN 60715
Mounting position	any
Useable DIN rail type	DIN rail: 35 mm

Drawings

Dimensional drawing

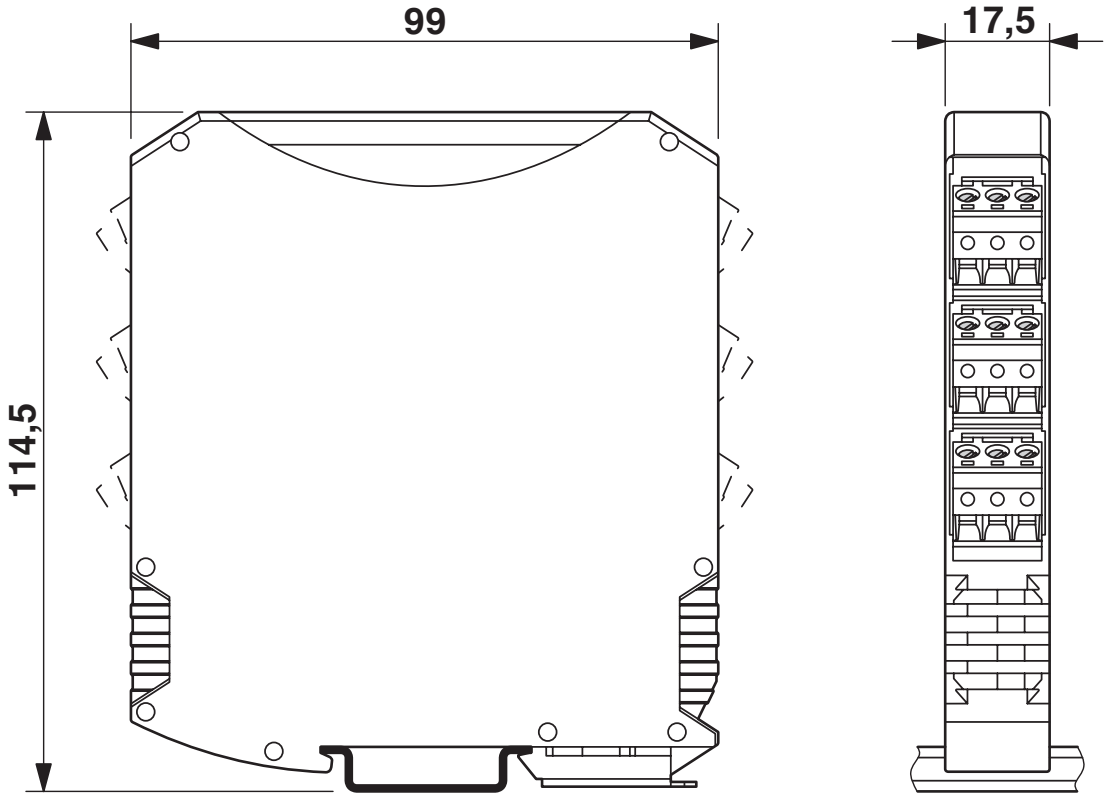

Slim design

Application drawing

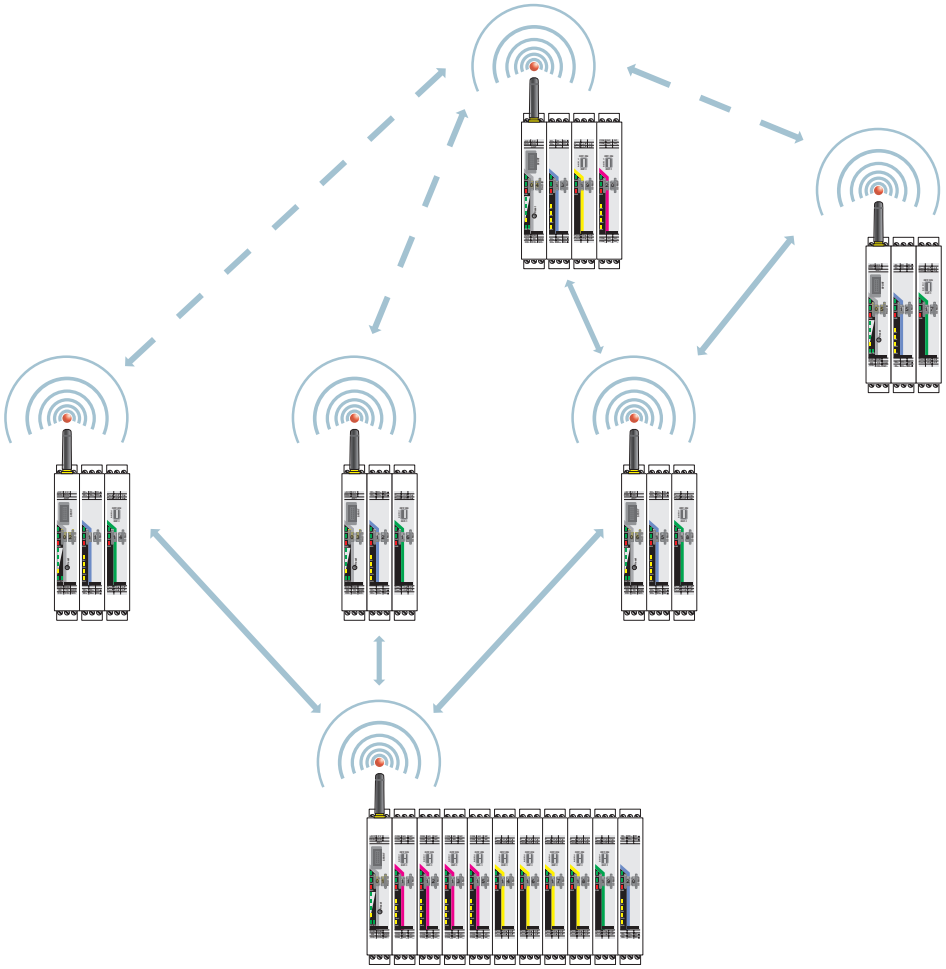

Wireless module in I/O data mode

Application drawing

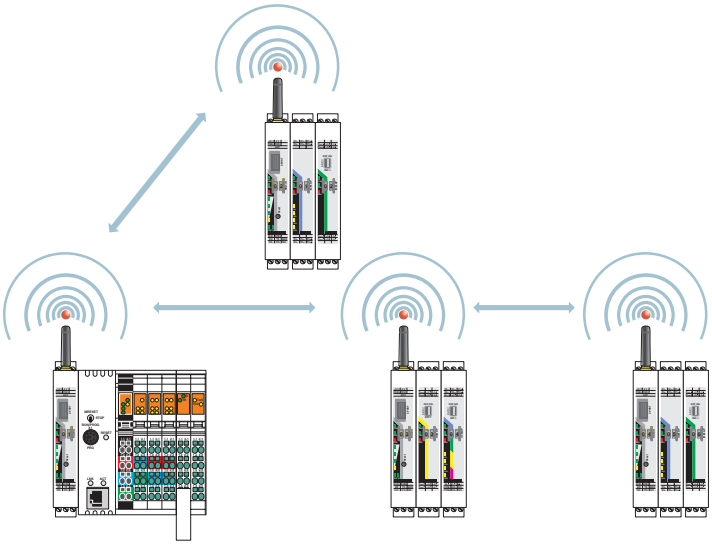

Wireless module in PLC/Modbus RTU mode

Application drawing

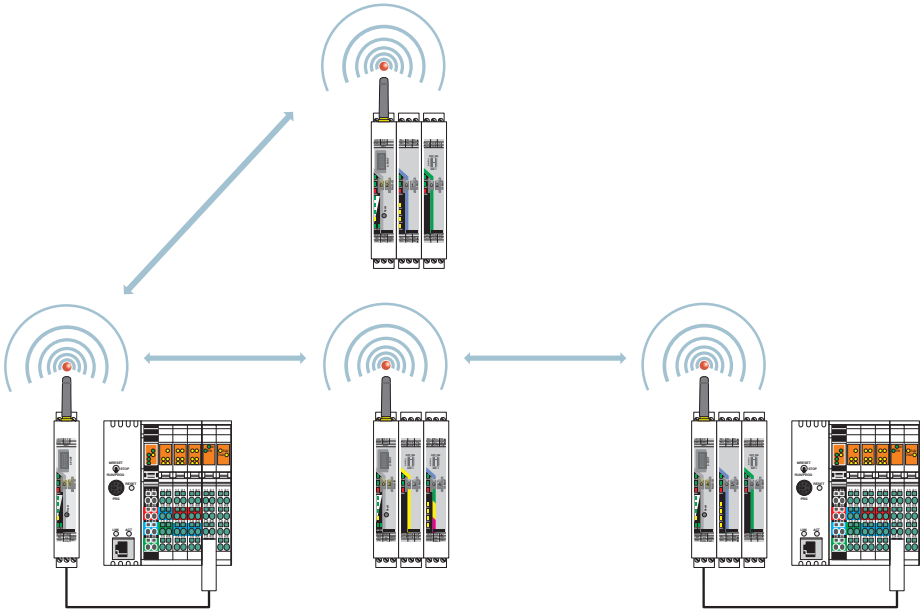

Wireless module in PLC/Modbus RTU dual mode

Application drawing

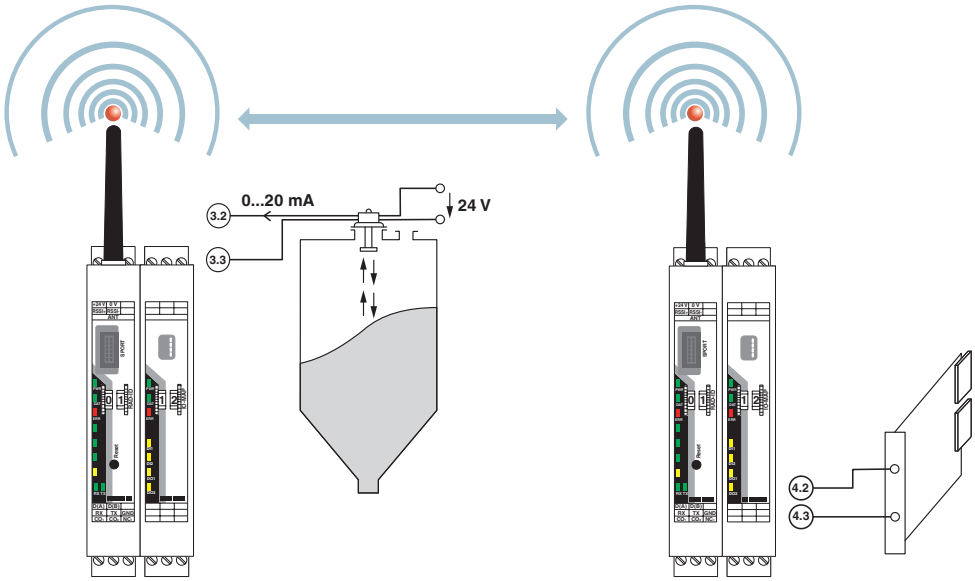

Application example: Level measurement

Functional drawing

RAD-DAIO6-IFS assignment: analog/digital inputs and outputs

Schematic diagram

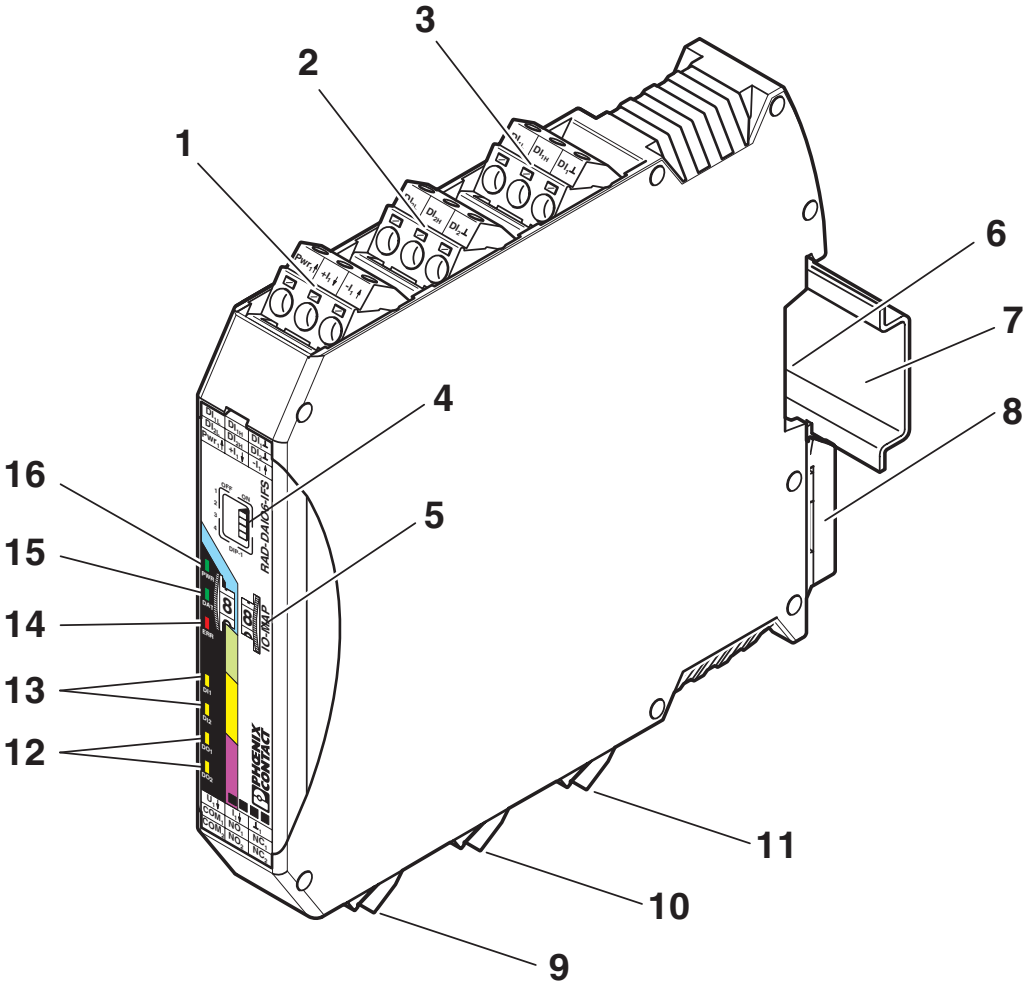

Function elements

Schematic diagram

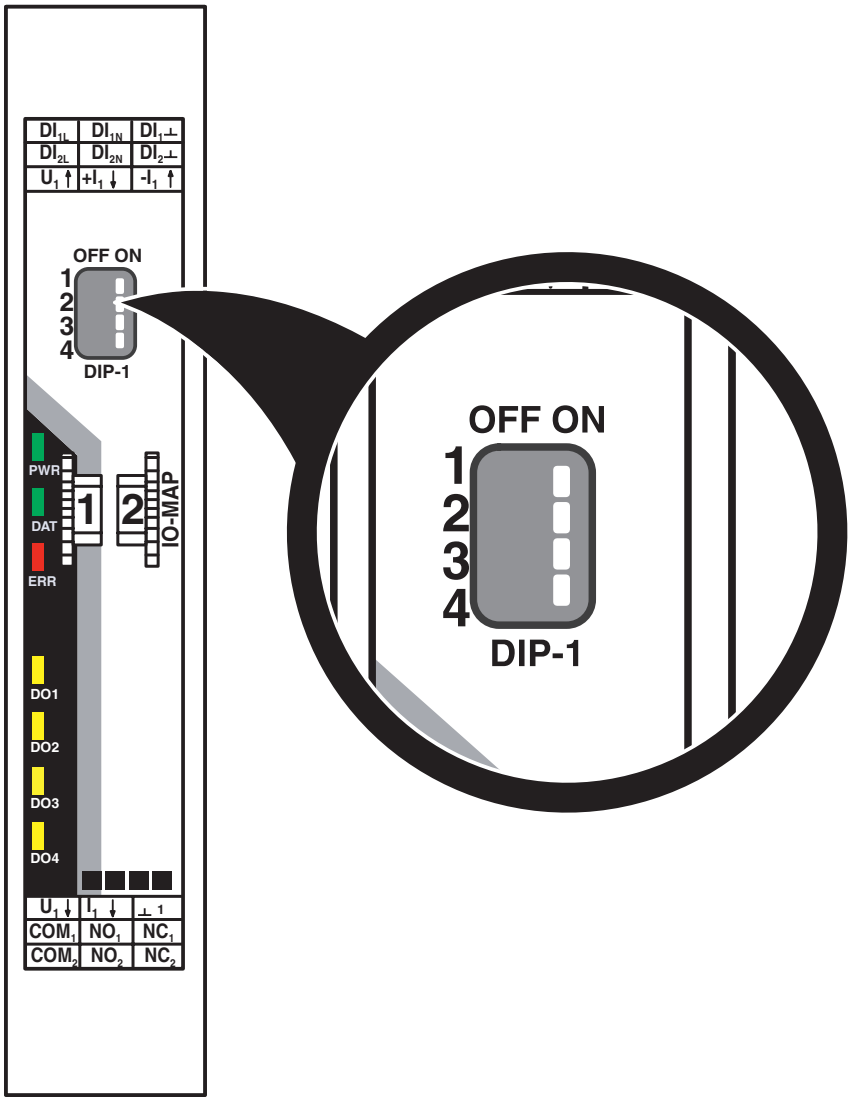

DIP switches

Schematic diagram

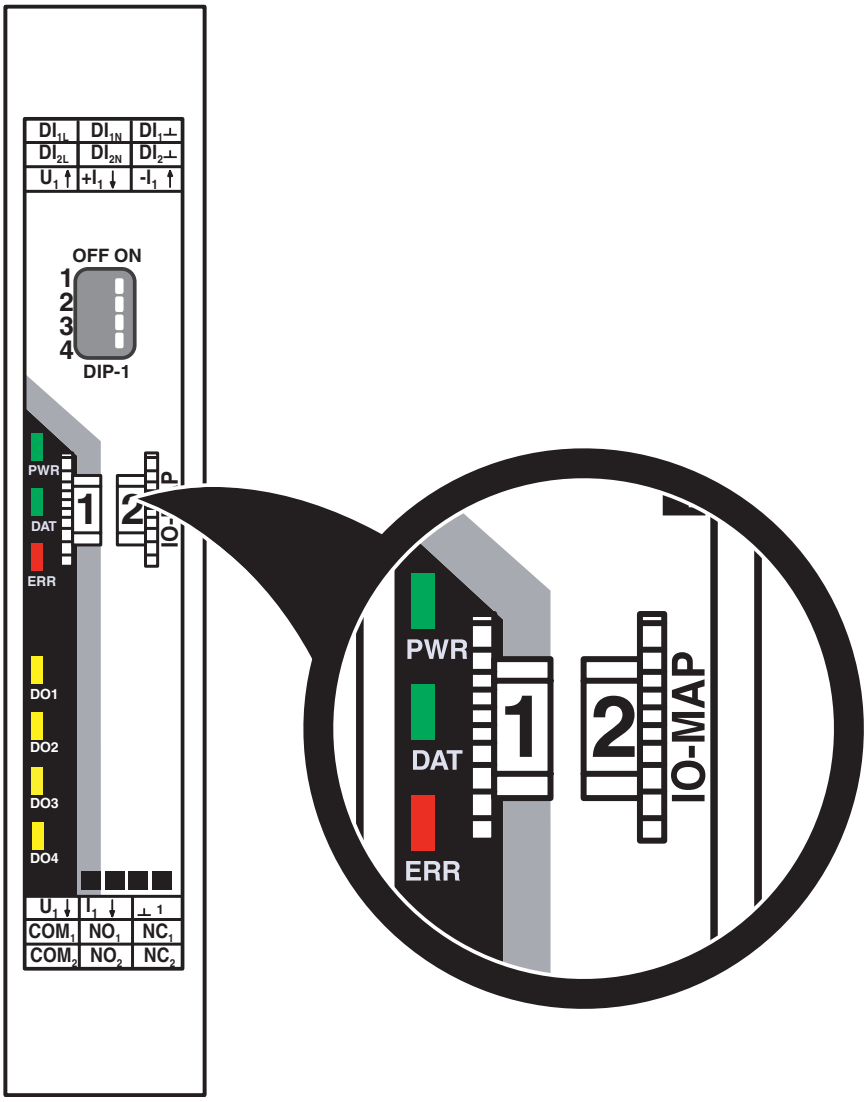

Thumbwheel

Schematic diagram

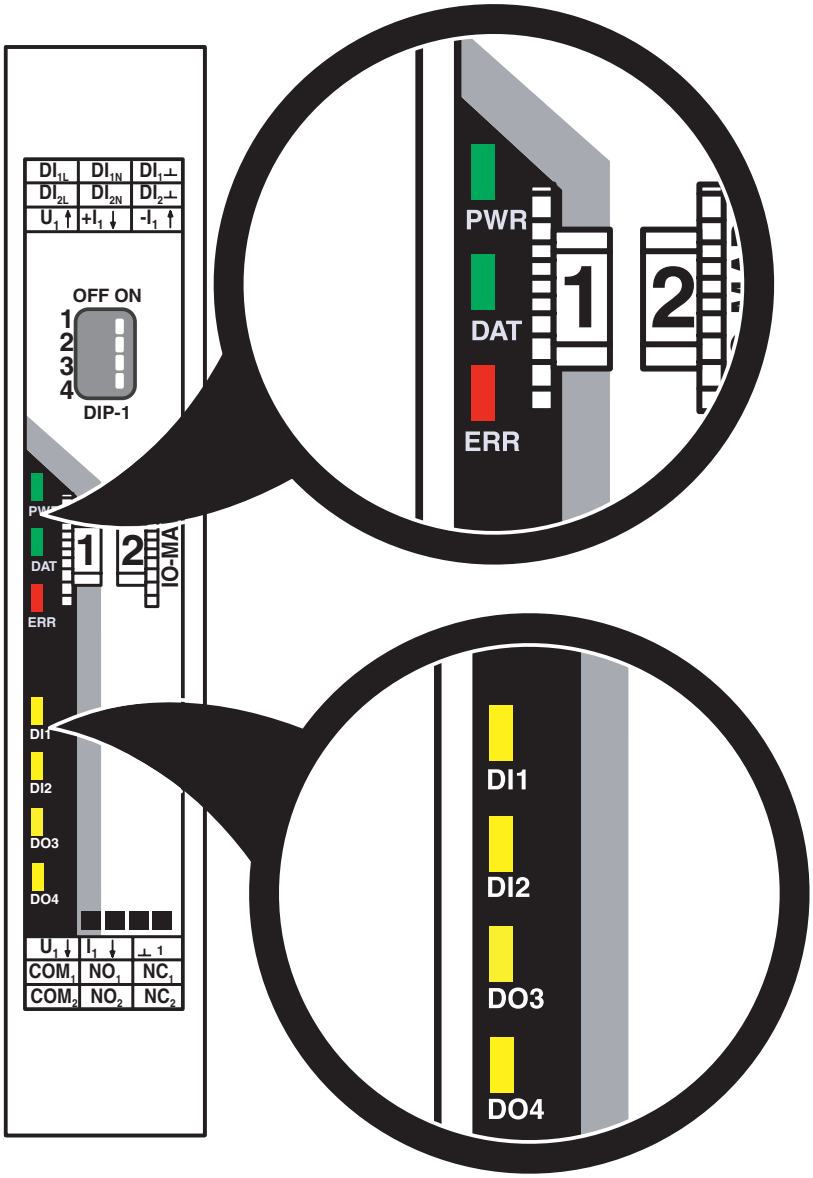

LED indicators

Circuit diagram

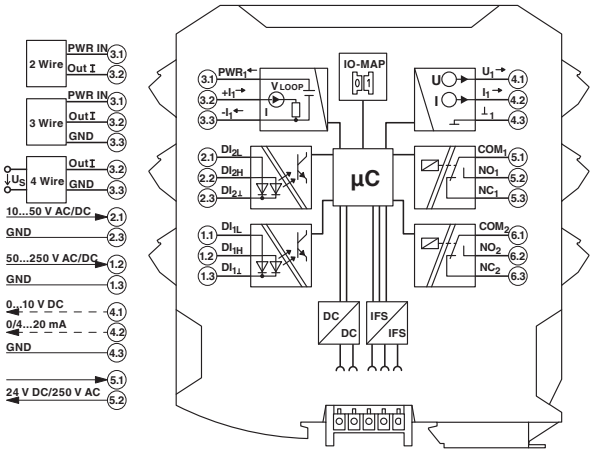

Basic circuit diagram

Approvals

To download certificates, visit the product detail page: https://www.phoenixcontact.com/us/products/2901533

UL Listed
Approval ID: E238705

cUL Listed
Approval ID: E238705

KC
Approval ID: R-R-PCK-2901533

cUL Listed
Approval ID: E196811

UL Listed
Approval ID: E196811

ATEX
Approval ID: IBExU15ATEXB008 X

IECEx
Approval ID: IECEx IBE 13.0019X

CCC
Approval ID: 2022122310115625

Classifications

ECLASS

ECLASS-13.0	27242602
ECLASS-15.0	27242602

ETIM

ETIM 10.0	EC001597

UNSPSC

UNSPSC 21.0	32151602

Environmental product compliance

EU RoHS

Fulfills EU RoHS substance requirements	Yes
Exemption	7(a), 7(c)-I

China RoHS

Environment friendly use period (EFUP)	EFUP-50
	An article-related China RoHS declaration table can be found in the download area for the respective article under "Manufacturer declaration". For all articles with EFUP-E, no China RoHS declaration table issued and required.

EU REACH SVHC

REACH candidate substance (CAS No.)	Lead(CAS: 7439-92-1)
SCIP	86507bc8-14a1-4496-9fe1-04df08b198dc

Phoenix Contact 2026 © - all rights reserved
https://www.phoenixcontact.com

Phoenix Contact USA
586 Fulling Mill Road
Middletown, PA 17057, United States
(+717) 944-1300
info@phoenixcon.com