PLC-OPT- 24DC/ 24DC/2/ACT - Solid-state relay module

2900376

https://www.phoenixcontact.com/us/products/2900376

Please be informed that the data shown in this PDF document is generated from our online catalog. Please find the complete data in the user documentation. Our general terms of use for downloads are valid.



PLC-INTERFACE for output functions, consisting of PLC-BPT.../ACT basic terminal block with push-in connection and plug-in miniature solid-state relay, for mounting on DIN rail NS 35/7,5, 1 N/O contact, input: 24 V DC, output: 3 - 33 V DC/3 A

Your advantages

- Actuator connected directly to relay module
- No need for additional modular terminal blocks
- Time savings of up to 60 %
- Efficient connection to system cabling using V8 adapter
- Relay modules with safe isolation according to DIN EN 50178 between coil and contact
- Space savings of up to 80 %
- Functional plug-in bridges

Commercial data

Item number	2900376
Packing unit	10 pc
Minimum order quantity	10 pc
Sales key	C462
Product key	DK62A3
GTIN	4046356506878
Weight per piece (including packing)	33.7 g
Weight per piece (excluding packing)	31.27 g
Customs tariff number	85364190
Country of origin	DE

Technical data

Product properties

Product type	Solid-state relay module
Product family	PLC-INTERFACE
Application	Output function
Operating mode	100% operating factor

Insulation characteristics: Standards/regulations

Insulation	Basic insulation
Overvoltage category	III
Pollution degree	2

Data management status

Date of last data management	13.10.2026

Electrical properties

Maximum power dissipation for nominal condition	0.56 W
Test voltage (Input/output)	2.5 kV (50 Hz, 1 min., input/output)

Input data

Nominal input voltage U_N	24 V DC
Nominal voltage (plugged-in solid-state relay)	24 V DC
Input voltage range in reference to U_N	0.8 ... 1.2
Input voltage range	19.2 V DC ... 28.8 V DC
Switching threshold "0" signal in reference to U_N	≤ 0.4
Switching threshold "1" signal in reference to U_N	≥ 0.8
Typical input current at U_N	8.5 mA
Typical response time	20 µs (at U_N)
Typical turn-off time	300 µs (at U_N)
Operating voltage display	Yellow LED
Protective circuit	Reverse polarity protection; Polarity protection diode
	Freewheeling diode; Freewheeling diode
Transmission frequency	300 Hz

Output data

Contact switching type	1 N/O contact
Design of digital output	electronic
Contact connection type	Power contact
Output voltage range	3 V DC ... 33 V DC
Limiting continuous current	3 A (see derating curve)
Maximum inrush current	15 A (10 ms)
Voltage drop at max. limiting continuous current	≤ 200 mV
Output circuit	2-conductor, floating

Protective circuit	Reverse polarity protection; Polarity protection diode
	Surge protection

Connection data

Connection method	Push-in connection
Stripping length	10 mm
Conductor cross-section rigid	0.14 mm² ... 2.5 mm²
Conductor cross-section flexible	0.14 mm² ... 2.5 mm²
	0.2 mm² ... 2.5 mm² (Single ferrule)
	2x 0.5 mm² ... 1 mm² (TWIN ferrule)
Conductor cross-section AWG	26 ... 14

Dimensions

Item dimensions

Width	6.2 mm
Height	80 mm
Depth	94 mm

Material specifications

Color	gray (RAL 7042)
Flammability rating according to UL 94 (Housing)	V0 (Housing)

Environmental and real-life conditions

Ambient conditions

Ambient temperature (operation)	-25 °C ... 60 °C
Ambient temperature (storage/transport)	-25 °C ... 70 °C

Approvals

CE

Certificate	CE-compliant

UKCA

Certificate	UKCA-compliant

Shipbuilding approval

Certificate	TAE0000196

Corrosive gas test

Identification	ISA-S71.04. G3 Harsh Group
	EN 60068-2-60

Shipbuilding data

Temperature	D
Humidity	A
Vibration	B/C

EMC	B
Enclosure	Required protection according to the Rules shall be provided upon installation on board

EMC data

Electromagnetic compatibility	Conformance with EMC directive
Low Voltage Directive	Conformance with Low Voltage Directive

Standards and regulations

Standards/regulations

Standards/regulations	IEC 60947-5-1

Mounting

Mounting type	DIN rail mounting
Assembly note	in rows with zero spacing
Mounting position	any

Drawings

Diagram

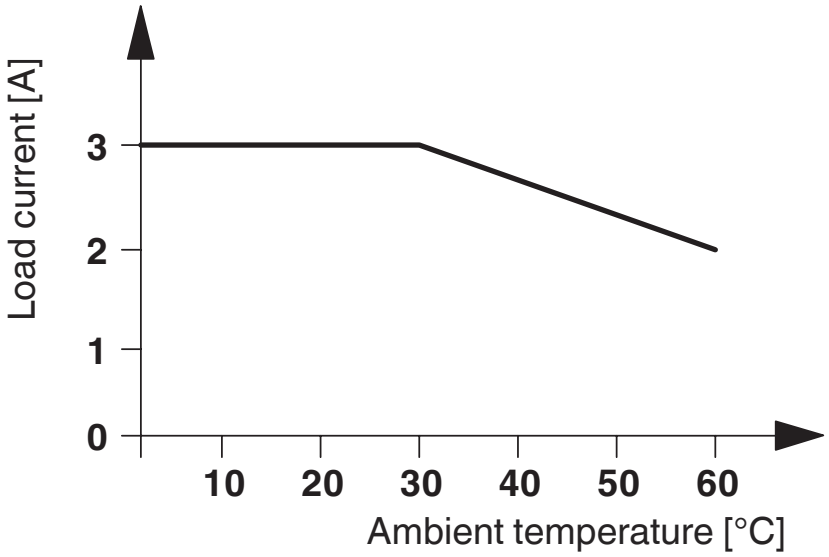

Circuit diagram

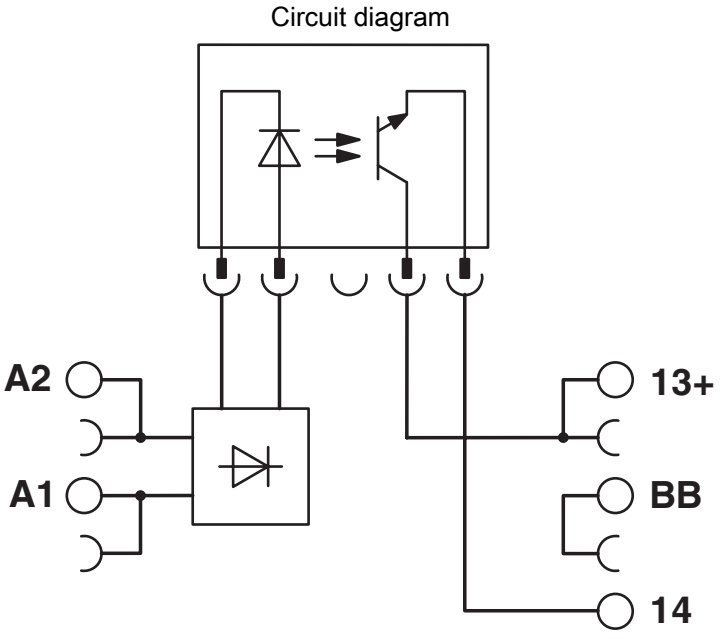

Approvals

To download certificates, visit the product detail page: https://www.phoenixcontact.com/us/products/2900376

cULus Listed
Approval ID: E140324

cULus Listed
Approval ID: E140324

cULus Listed
Approval ID: E140324

DNV
Approval ID: TAE0000196

Classifications

ECLASS

ECLASS-13.0	27371604
ECLASS-15.0	27371604

ETIM

ETIM 10.0	EC001504

UNSPSC

UNSPSC 21.0	39122300

Environmental product compliance

EU RoHS

Fulfills EU RoHS substance requirements	Yes
Exemption	7(a), 7(c)-I

China RoHS

Environment friendly use period (EFUP)	EFUP-50
	An article-related China RoHS declaration table can be found in the download area for the respective article under "Manufacturer declaration". For all articles with EFUP-E, no China RoHS declaration table issued and required.

EU REACH SVHC

REACH candidate substance (CAS No.)	Hexahydromethylphthalic anhydride(CAS: n/a)
	Lead(CAS: 7439-92-1)
SCIP	ce0b0df0-8845-4358-ba4b-1f83815c8473

EF3.1 Climate Change

CO2e kg	0.305 kg CO2e

Phoenix Contact 2026 © - all rights reserved
https://www.phoenixcontact.com

Phoenix Contact USA
586 Fulling Mill Road
Middletown, PA 17057, United States
(+717) 944-1300
info@phoenixcon.com