DT-TELE-RJ45 - Surge protection device

2882925

https://www.phoenixcontact.com/us/products/2882925

Please be informed that the data shown in this PDF document is generated from our online catalog. Please find the complete data in the user documentation. Our general terms of use for downloads are valid.





Attachment plug with surge protection for analog and digital telecommunications interfaces (VDSL up to 50 Mbps). Connection: RJ45 (RJ12/RJ11) and screw terminal block (COMBICON). Alternatively, can be snapped onto a DIN rail.

Your advantages

- Easy network integration via RJ45/COMBICON connection
- No signal interference with adapted protective circuit
- Can be installed in a control cabinet by removing the ground connection adapter

Commercial data

Item number	2882925
Packing unit	1 pc
Minimum order quantity	1 pc
Sales key	CL03
Product key	CL3221
GTIN	4046356155137
Weight per piece (including packing)	330 g
Weight per piece (excluding packing)	314.324 g
Customs tariff number	85369010
Country of origin	DE

Technical data

Product properties

Product type	Surge protection for information technology
Product family	DATATRAB
IEC test classification	B2
	C1
	C2
	C3
	D1
Type	Attachment plug for DIN rail mounting
Number of positions	4
Wire pairs per module	2

Insulation characteristics

Overvoltage category	II
Pollution degree	2

Connection data

Connection method	RJ45 / COMBICON
Screw thread	M2
Tightening torque	0.22 Nm
Conductor cross-section flexible	0.14 mm² ... 1.5 mm²
Conductor cross-section rigid	0.14 mm² ... 1.5 mm²
Conductor cross-section AWG	28 ... 16

Dimensions

Dimensional drawing	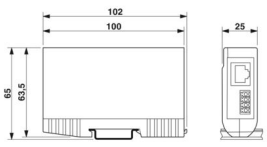
Width	25 mm
Height	102 mm
Depth	63.5 mm

Material specifications

Color	silver-colored
	black (RAL 9005)
Housing material	Die-cast zinc

Mechanical properties

Mechanical data

Open side panel	No

Protective circuit

Direction of action	Line-Line & Line-Ground/Shield
Maximum continuous operating voltage U_C	185 V DC
	130 V AC
Rated current	≤ 380 mA (25 °C)
Operating effective current I_C at U_C	≤ 6 µA
Protective conductor current I_{PE}	≤ 4 µA
Nominal discharge current I_n (8/20) µs (line-line)	≤ 5 kA
Nominal discharge current I_n (8/20) µs (line-ground)	≤ 5 kA
Total discharge current I_{Total} (8/20) µs	10 kA
Nominal pulse current Ian (10/1000) µs (line-line)	100 A
Nominal pulse current Ian (10/1000) µs (line-earth)	100 A
Nominal pulse current Ian (10/700) µs (line-line)	150 A
Nominal pulse current Ian (10/700) µs (line-earth)	150 A
Output voltage limitation at 1 kV/µs (line-line) static	≤ 250 V
Output voltage limitation at 1 kV/µs (line-earth) static	≤ 250 V
Residual voltage at I_n (conductor-conductor)	≤ 120 V
Residual voltage at I_n (conductor-ground)	≤ 120 V
Voltage protection level U_p (line-line)	≤ 250 V (B2 - 4 kV / 100 A)
	≤ 250 V (C1 - 1 kV / 500 A)
	≤ 250 V (C2 - 10 kV / 5 kA)
Voltage protection level U_p (line-earth)	≤ 250 V (B2 - 4 kV / 100 A)
	≤ 250 V (C1 - 1 kV / 500 A)
	≤ 250 V (C2 - 10 kV / 5 kA)
Response time t_A (line-line)	≤ 100 ns
Response time t_A (line-earth)	≤ 100 ns
Input attenuation aE, sym.	typ. 0.5 dB (≤ 5 MHz / 100 Ω)
	typ. 0.3 dB (≤ 8 MHz/150 Ω)
	typ. 0.3 dB (≤ 2.5 MHz / 600 Ω)
Cut-off frequency fg (3 dB), sym. in 100 Ω system	typ. 50 MHz
Capacity (Core-Core)	typ. 20 pF (f= 1 MHz / VR= 0 V)
Capacity (Core-Earth)	typ. 20 pF (f= 1 MHz / VR= 0 V)
Resistance per path	3.3 Ω 10 %
Surge protection fault message	none
Impulse durability (line-line)	B2 - 4 kV / 100 A
	C1 - 1 kV / 500 A
	C2 - 10 kV / 5 kA
Impulse durability (line-earth)	B2 - 4 kV / 100 A
	C1 - 1 kV / 500 A
	C2 - 10 kV / 5 kA

	D1 - 1 kA

Environmental and real-life conditions

Ambient conditions

Degree of protection	IP20
Ambient temperature (operation)	-40 °C ... 85 °C
Ambient temperature (storage/transport)	-40 °C ... 85 °C

Standards and regulations

Standards/specifications	IEC 61643-21
Note	2012
Standards/specifications	EN 61643-21
Note	2013

Mounting

Mounting type	Connection-specific attachment plug and DIN rail, 35 mm

Drawings

Dimensional drawing

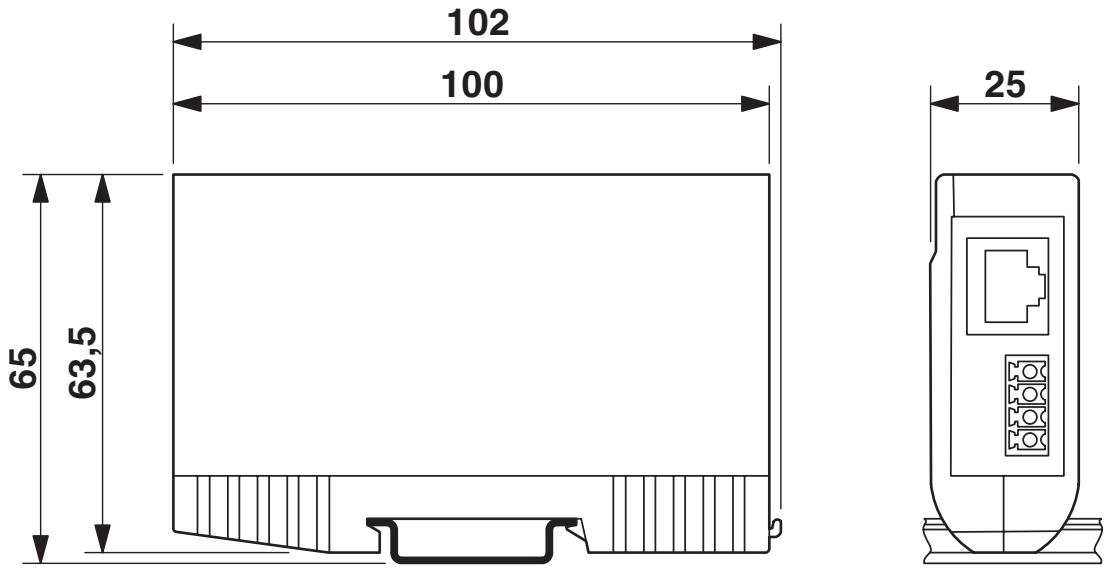

Circuit diagram

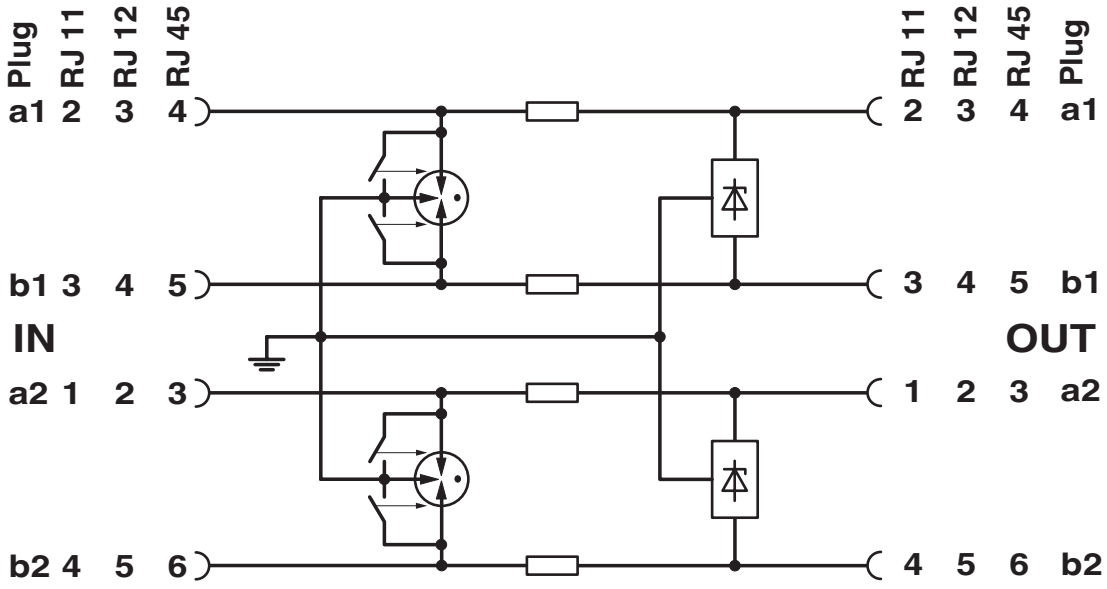

Classifications

ECLASS

ECLASS-13.0	27171503
ECLASS-15.0	27171503

ETIM

ETIM 10.0	EC001466

UNSPSC

UNSPSC 21.0	39121600

Environmental product compliance

EU RoHS

Fulfills EU RoHS substance requirements	Yes
Exemption	6(a), 6(a)-I, 7(a), 7(c)-I

China RoHS

Environment friendly use period (EFUP)	EFUP-50
	An article-related China RoHS declaration table can be found in the download area for the respective article under "Manufacturer declaration". For all articles with EFUP-E, no China RoHS declaration table issued and required.

EU REACH SVHC

REACH candidate substance (CAS No.)	Lead(CAS: 7439-92-1)
SCIP	385eeb3d-939f-419a-a4d2-a539f7ea43e9

Phoenix Contact 2026 © - all rights reserved
https://www.phoenixcontact.com

Phoenix Contact USA
586 Fulling Mill Road
Middletown, PA 17057, United States
(+717) 944-1300
info@phoenixcon.com