MNT-1 D - Type 3 surge protection device

2882200

https://www.phoenixcontact.com/us/products/2882200

Please be informed that the data shown in this PDF document is generated from our online catalog. Please find the complete data in the user documentation. Our general terms of use for downloads are valid.



Attachment plug with surge protection for mains sockets, optical power and error display. For country-specific use in: D, A, I, NL, S, E, N, FIN

Commercial data

Item number	2882200
Packing unit	1 pc
Minimum order quantity	1 pc
Sales key	CL01
Product key	CL1421
GTIN	4046356073554
Weight per piece (including packing)	123 g
Weight per piece (excluding packing)	101.34 g
Customs tariff number	85363010
Country of origin	DE

Technical data

Product properties

Product type	Device protection
Product family	MAINTRAB
IEC power supply system	TN
	TT
Type	Intermediate plug
Number of positions	2
For country-specific use in	D, A, NL, E, S, FIN, TR
Surge protection fault message	optical

Insulation characteristics

Overvoltage category	III
Pollution degree	2
IEC test classification	III
	T3
EN type	T3
Number of ports	One

Connection data

Connection method	Grounding plug/socket

Dimensions

Dimensional drawing	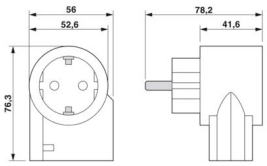
Width	56 mm
Height	76 mm
Depth	78 mm

Material specifications

Color	black (RAL 9005)
	black (RAL 9005)
Flammability rating according to UL 94	V-0
CTI value of material	400
	600
Insulating material	PA 6
Housing material	PA 6

Protective circuit

Mode of protection	L-N
	L-PE
	N-PE
Direction of action	L(N)-PE
Nominal voltage U_N	230/400 V AC (TN/TT)
Nominal frequency f_N	50 Hz (60 Hz)
Maximum continuous operating voltage U_C (L-N)	275 V AC
Maximum continuous operating voltage U_C (L-PE)	360 V AC
Maximum continuous operating voltage U_C (N-PE)	360 V AC
Rated load current I_L	16 A (30 °C)
Protective conductor current I_{PE}	≤ 5 µA
Standby power consumption P_C	≤ 1 VA
Reference test voltage U_{REF}	255 V AC
Combination wave U_{OC}	6 kV
Voltage protection level U_p	≤ 1.5 kV
TOV behavior at U_T (L-N)	460 V AC (5 s / withstand mode)
	460 V AC (120 min / safe failure mode)
TOV behavior at U_T (L-PE)	460 V AC (5 s / withstand mode)
	460 V AC (120 min / withstand mode)
	1455 V AC (200 ms / safe failure mode)
TOV behavior at U_T (N-PE)	1200 V AC (200 ms / safe failure mode)
Response time t_A (L-N)	≤ 25 ns
Response time t_A (L-PE)	≤ 100 ns
Response time t_A (N-PE)	≤ 100 ns
Max. required back-up fuse	16 A (gG / B / C)
Short-circuit current rating I_{SCCR}	1.5 kA AC

Environmental and real-life conditions

Ambient conditions

Degree of protection	IP20 (Child-proofing)
Ambient temperature (operation)	-25 °C ... 75 °C
Ambient temperature (storage/transport)	-25 °C ... 75 °C
Altitude	≤ 2000 m (amsl)
Permissible humidity (operation)	5 % ... 95 %

Standards and regulations

Air clearances and creepage distances

Standards/regulations	EN 60664-1 / IEC 60664-1 / IEC 61643-1 / EN 61643-11
Standards/specifications	IEC 61643-11
Note	2011
Standards/specifications	EN 61643-11
Note	2019

Mounting

Mounting type	Plugging into the mains socket

Drawings

Dimensional drawing

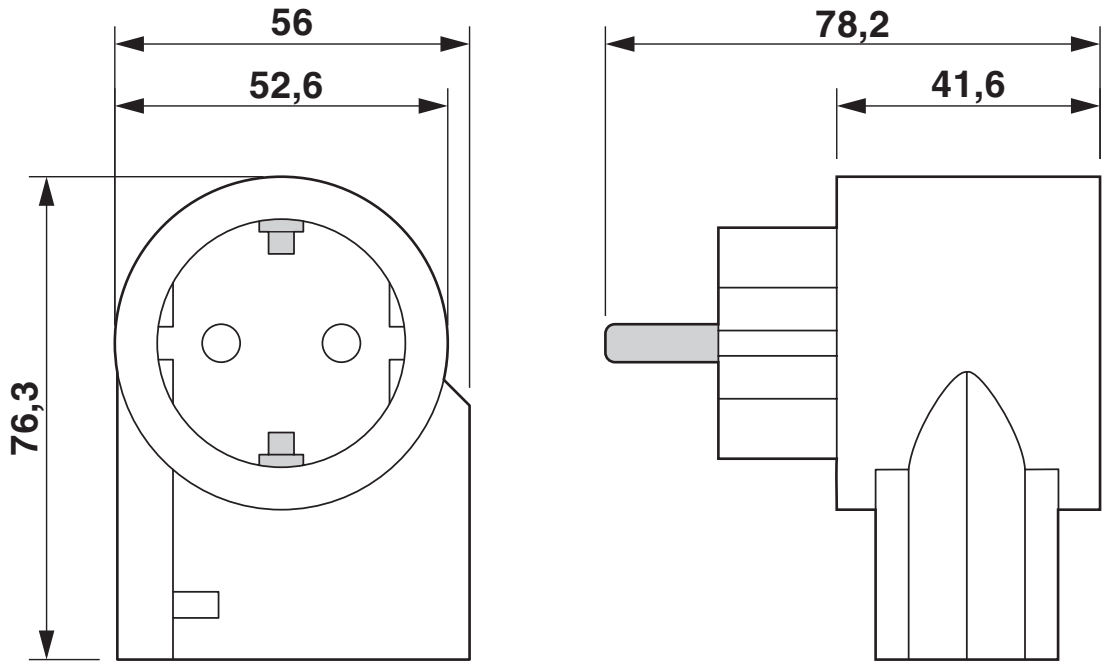

Application drawing

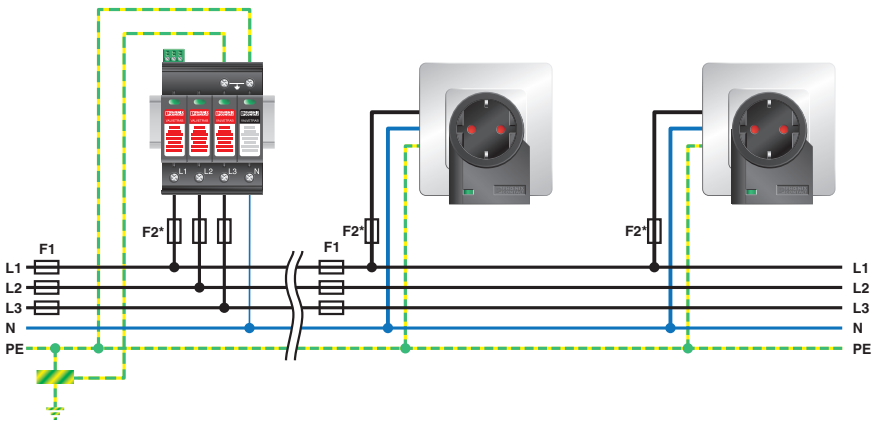

Application drawing

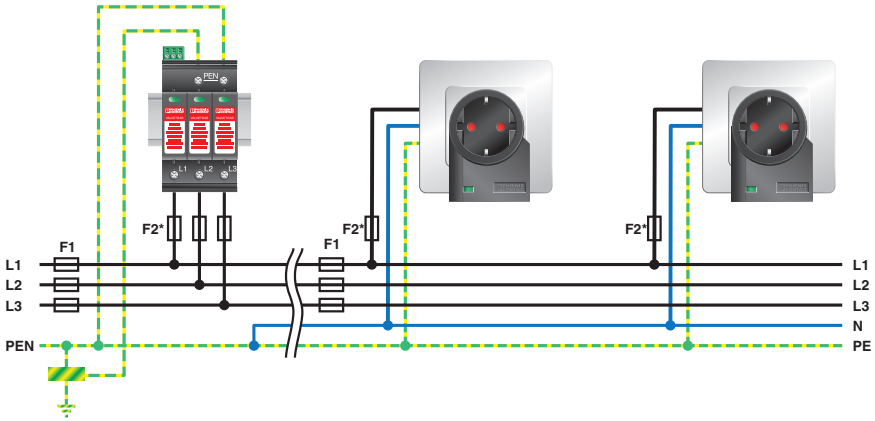

Circuit diagram

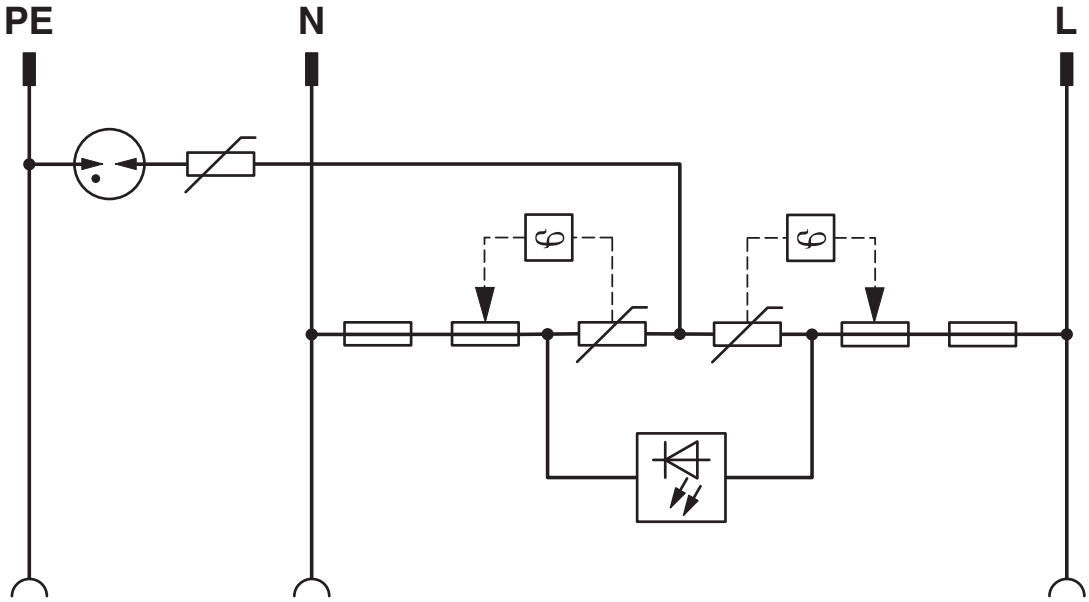

Classifications

ECLASS

ECLASS-13.0	27171203

ETIM

ETIM 9.0	EC000942

UNSPSC

UNSPSC 21.0	39121600

Environmental product compliance

EU RoHS

Fulfills EU RoHS substance requirements	Yes
Exemption	6(c), 7(c)-I

China RoHS

Environment friendly use period (EFUP)	EFUP-50
	An article-related China RoHS declaration table can be found in the download area for the respective article under "Manufacturer declaration". For all articles with EFUP-E, no China RoHS declaration table issued and required.

EU REACH SVHC

REACH candidate substance (CAS No.)	Hexahydromethylphthalic anhydride(CAS: n/a)
	Lead(CAS: 7439-92-1)
SCIP	1bb984c9-8c04-490a-8ad9-e76bd4806620

Phoenix Contact 2026 © - all rights reserved
https://www.phoenixcontact.com

Phoenix Contact USA
586 Fulling Mill Road
Middletown, PA 17057, United States
(+717) 944-1300
info@phoenixcon.com