DT-LAN-CAT.6+ - Surge protection device

2881007

https://www.phoenixcontact.com/us/products/2881007

Please be informed that the data shown in this PDF document is generated from our online catalog. Please find the complete data in the user documentation. Our general terms of use for downloads are valid.



Surge protection in accordance with Class E_A ($CAT6_A$), for Gigabit Ethernet (up to 10 Gbps), token ring, FDDI/CDDI, ISDN, and DS1. Suitable for Power over Ethernet (PoE++ / 4PPoE) “Mode A” and “Mode B”. RJ45 attachment plug with separate grounding cable and ground connection snap-on foot for NS 35 DIN rails.

Your advantages

- Can be used in applications up to 10 Gbps with adapted protective circuit
- High power transmission with PoE++ / 4PPoE support
- Easy network integration via RJ45 jacks
- Can be installed in a control cabinet by removing the ground connection adapter
- Suitable for category 6 high-speed data networks

Commercial data

Item number	2881007
Packing unit	1 pc
Minimum order quantity	1 pc
Sales key	CL24
Product key	CL3112
GTIN	4046356151900
Weight per piece (including packing)	316 g
Weight per piece (excluding packing)	314.1 g
Customs tariff number	85363010
Country of origin	DE

Technical data

Product properties

Product type	Surge protection for information technology
Product family	DATATRAB
IEC test classification	B2
	C1
	C2
	C3
	D1
Type	Attachment plug for DIN rail mounting
Number of positions	8
Surge protection fault message	none
Wire pairs per module	4

Insulation characteristics

Overvoltage category	II
Pollution degree	2

Connection data

Connection method	RJ45

Dimensions

Dimensional drawing	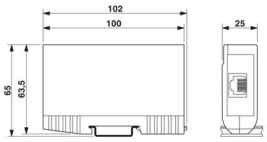
Width	25 mm
Height	102 mm
Depth	63.5 mm

Material specifications

Color	silver-colored
Housing material	Die-cast zinc

Mechanical properties

Mechanical data

Open side panel	No

Protective circuit

Direction of action	Line-Line & Line-Ground/Shield

Maximum continuous voltage U_C (line-line)	≤ 3.3 V DC (±60 V DC/PoE+)
Rated current	≤ 1.5 A (25 °C)
Operating effective current I_C at U_C	≤ 1 µA
Protective conductor current I_{PE}	≤ 400 µA
Nominal discharge current I_n (8/20) µs (line-line)	100 A
Nominal discharge current I_n (8/20) µs (line-ground)	2 kA (per signal pair)
Pulse discharge current I_{imp} (10/350) µs (line-earth)	1 kA
Total discharge current I_{Total} (8/20) µs	10 kA
Nominal pulse current Ian (10/700) µs (line-line)	≤ 40 A
Nominal pulse current Ian (10/700) µs (line-earth)	≤ 160 A
Output voltage limitation at 1 kV/µs (line-line) spike	≤ 85 V (PoE)
Output voltage limitation at 1 kV/µs (line-earth) spike	≤ 700 V
Output voltage limitation at 1 kV/µs (line-line) static	≤ 9 V
Output voltage limitation at 1 kV/µs (line-earth) static	≤ 700 V
Residual voltage at I_n (conductor-conductor)	≤ 15 V
	≤ 100 V (PoE)
Voltage protection level U_p (line-line)	≤ 9 V (B2 - 1 kV / 25 A)
	≤ 100 V (B2 - 1 kV / 25 A - PoE)
	≤ 12 V (C3 - 20 A)
Voltage protection level U_p (line-earth)	≤ 900 V (B2 - 4 kV / 100 A)
	≤ 700 V (C2 - 4 kV / 2 kA)
	≤ 1 kV (C3 - 80 A)
Response time t_A (line-line)	≤ 1 ns
Response time t_A (line-earth)	≤ 100 ns
Input attenuation aE, sym.	≤ 1 dB (up to 100 MHz/direct measuring)
	≤ 1 dB (up to 250 MHz/direct measuring)
	≤ 3 dB (up to 500 MHz/direct measuring)
Near-end crosstalk attenuation	≥ 35 dB (250 MHz/100 Ω/link)
	≥ 45 dB (100 MHz / 100 Ω / Link)
	≥ 27 dB (500 MHz / 100 Ω / Link)
	≥ 39 dB (250 MHz/100 Ω/direct measuring)
Capacity (Core-Core)	typ. 12 pF (f= 1 MHz / VR= 0 V)
Capacity (Core-Earth)	typ. 2 pF (f= 1 MHz / VR= 0 V)
Surge protection fault message	none
Impulse durability (line-line)	B2 - 1 kV / 25 A
	C3 - 20 A
Impulse durability (line-earth)	B2 - 4 kV / 100 A
	C2 - 4 kV / 2 kA
	C3 - 80 A
	D1 - 1 kA

Environmental and real-life conditions

Ambient conditions

Degree of protection	IP20
Ambient temperature (operation)	-40 °C ... 70 °C
Ambient temperature (storage/transport)	-40 °C ... 70 °C
Altitude	≤ 4000 m (amsl)
Permissible humidity (operation)	5 % ... 85 %

Standards and regulations

Standards/specifications	IEC 61643-21
Note	2002
Standards/specifications	EN 50173-1
Note	2002
Standards/specifications	ISO/IEC 11801-Am.1
Note	2006

Mounting

Mounting type	Connection-specific attachment plug and DIN rail, 35 mm

Drawings

Dimensional drawing

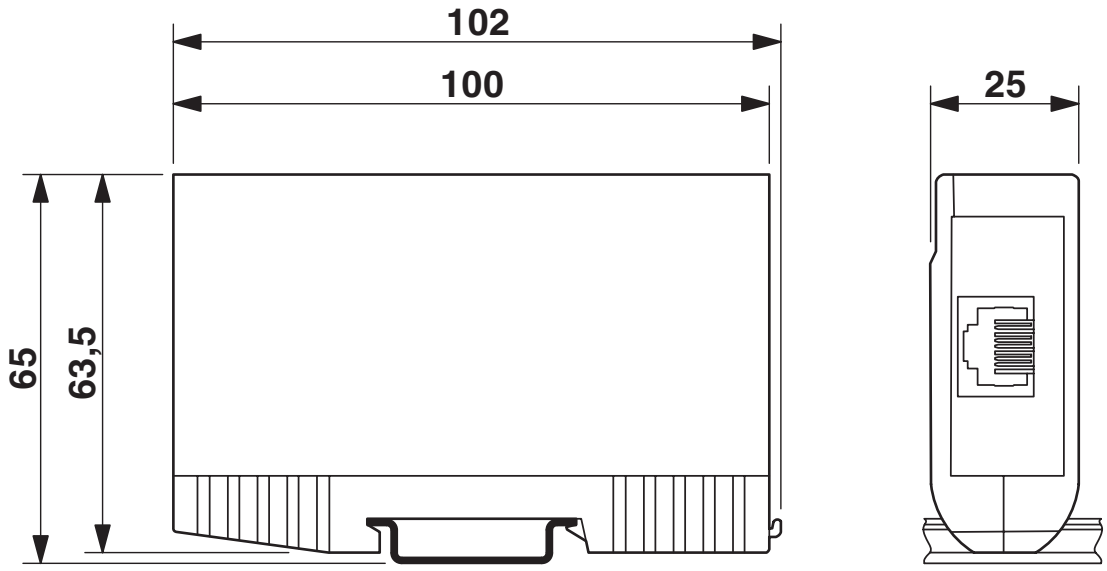

Application drawing

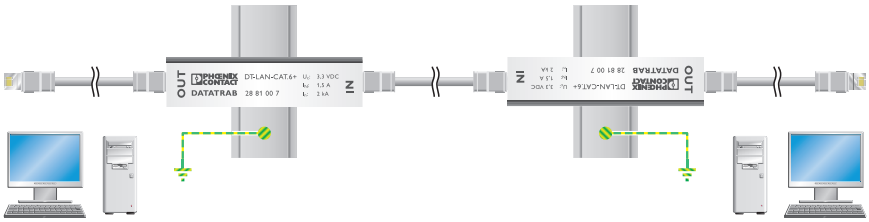

Circuit diagram

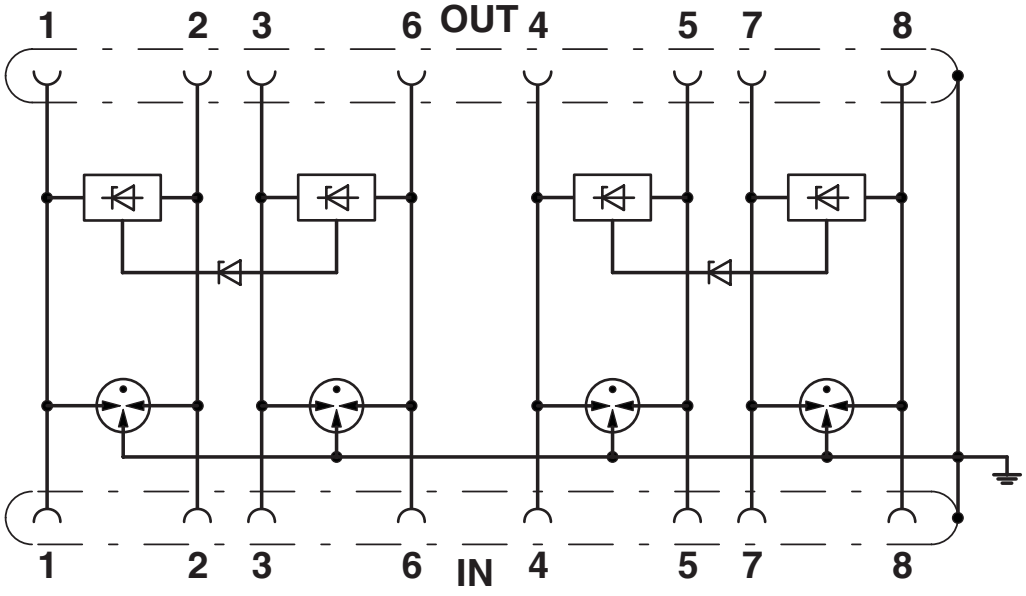

Approvals

To download certificates, visit the product detail page: https://www.phoenixcontact.com/us/products/2881007

UL Listed
Approval ID: FILE E 138168

UAE-RoHS
Approval ID: 23-10-88352

Classifications

ECLASS

ECLASS-13.0	27171503
ECLASS-15.0	27171503

ETIM

ETIM 10.0	EC001466

UNSPSC

UNSPSC 21.0	39121600

Environmental product compliance

EU RoHS

Fulfills EU RoHS substance requirements	Yes
Exemption	6(a), 6(a)-I, 7(a), 7(c)-I

China RoHS

Environment friendly use period (EFUP)	EFUP-50
	An article-related China RoHS declaration table can be found in the download area for the respective article under "Manufacturer declaration". For all articles with EFUP-E, no China RoHS declaration table issued and required.

EU REACH SVHC

REACH candidate substance (CAS No.)	Lead(CAS: 7439-92-1)
SCIP	0151641f-8d9c-4558-8f99-5ef76a28eeb6

EF3.1 Climate Change

CO2e kg	6.529 kg CO2e

Phoenix Contact 2026 © - all rights reserved
https://www.phoenixcontact.com

Phoenix Contact USA
586 Fulling Mill Road
Middletown, PA 17057, United States
(+717) 944-1300
info@phoenixcon.com