# EMD-SL-C-UC-10 - Monitoring relay

2867937

https://www.phoenixcontact.com/us/products/2867937

Please be informed that the data shown in this PDF document is generated from our online catalog. Please find the complete data in the user documentation. Our general terms of use for downloads are valid.



Monitoring relay for monitoring 1-phase currents of 0…10 A AC/DC, undercurrent, supply voltage can be selected via power module, 1 changeover contact

## Product description

Increasingly higher demands are being placed on safety and system availability - across all sectors. Processes are becoming more and more complex, not only in mechanical engineering and the chemical industry, but also in plant and automation technology. Demands on power engineering are also increasing constantly.
Error-free and therefore cost-effective operation can only be achieved through continuous monitoring of important network and system parameters. Electronic monitoring relays in the EMD series are available for a wide range of monitoring tasks to avoid the consequences of errors or to keep them within limits.
The operating states are indicated using colored LEDs, errors that may occur can be sent to a control system via a floating contact or can shut down a part of the system. Some device versions are equipped with startup and response delays in order to briefly tolerate measured values outside the set monitoring range.

## Your advantages

- Separately adjustable startup and response delays
- Variable supply voltage range
- Adjustable via potentiometer on the front

## Commercial data

| | |
|---|---|
| Item number | 2867937 |
| Packing unit | 1 pc |
| Minimum order quantity | 1 pc |
| Sales key | C440 |
| Product key | DK6632 |
| GTIN | 4046356046954 |
| Weight per piece (including packing) | 136.7 g |
| Weight per piece (excluding packing) | 134.9 g |
| Customs tariff number | 85364900 |
| Country of origin | AT |

## Technical data

### Product properties

| | |
|---|---|
| Product type | Current monitoring relay |
| Operating mode | 100% operating factor |
| Mechanical service life | approx. 2x $10^7$ cycles |

Insulation characteristics

| | |
|---|---|
| Insulation | Basic insulation |
| Overvoltage category | III |
| Pollution degree | 2 |

### Electrical properties

| | |
|---|---|
| Service life electrical | 2x $10^5$ cycles at ohmic load, 1000 VA |
| Mains type | 1-phase |
| Rated insulation voltage | 300 V |
| Rated surge voltage | 4 kV |

Supply

| | |
|---|---|
| Supply voltage range | 24 V AC ... 230 V AC (see Power modules) |
| | 24 V DC (see Power modules) |
| Nominal power consumption | 2 VA (1.5 W) |

### Input data

| | |
|---|---|
| Input name | Measuring input |
| Measured value | DC, AC sine |
| Input current range | 0 mA ... 100 mA (Connection terminal blocks: I1 and GND) |
| | 0 A ... 1 A (Connection terminal blocks: I2 and GND) |
| | 0 A ... 10 A (Connection terminal blocks: I3 and GND) |
| Overload capacity | 800 mA (at $I_N$ = 100 mA) |
| | 3 A (at $I_N$ = 1 A) |
| | 12 A (at $I_N$ = 10 A) |
| Input resistance current input | 470 mΩ (at $I_N$ = 100 mA) |
| | 47 mΩ (at $I_N$ = 1 A) |
| | 5 mΩ (at $I_N$ = 10 A) |
| Frequency range | 48 Hz ... 63 Hz |
| Maximum temperature coefficient | < 0.1 %/K |
| Setting range for response delay | 0.2 s ... 10 s |
| Min. setting range | 5 % ... 95 % (from $I_N$) |
| Max. setting range | 10 % ... 100 % (from $I_N$) |
| Function | Undercurrent |
| Basic accuracy | ± 5 % (of scale end value) |
| Setting accuracy | ≤ 5 % (of scale end value) |
| Repeat accuracy | ≤ 2 % |

| | |
|---|---|
| Recovery time | 500 ms |

## Output data

Switching

| | |
|---|---|
| Contact switching type | 1 floating changeover contact |
| Maximum switching voltage | 250 V AC (in acc. with IEC 60664-1) |
| Interrupting rating (ohmic load) max. | 750 VA (3 A/250 V AC, module aligned, ≤ 5 mm spacing) |
| | 1250 VA (5 A/250 V AC, module not aligned, ≥ 5 mm spacing) |
| Output fuse | 5 A (fast-blow) |

## Connection data

| | |
|---|---|
| Connection method | Screw connection |
| Stripping length | 8 mm |
| Conductor cross-section rigid | 0.5 mm² ... 2.5 mm² |
| Conductor cross-section flexible | 0.25 mm² ... 2.5 mm² |
| Conductor cross-section AWG | 20 ... 14 |

## Dimensions

| | |
|---|---|
| Width | 22.5 mm |
| Height | 90 mm |
| Depth | 113 mm |

## Material specifications

| | |
|---|---|
| Color | green (RAL 6021) |
| Housing insulation material | Polyamide PA, self-extinguishing |

## Environmental and real-life conditions

Ambient conditions

| | |
|---|---|
| Degree of protection (Housing) | IP40 (Housing) |
| Degree of protection (Connection terminal blocks) | IP20 (Connection terminal blocks) |
| Ambient temperature (operation) | -25 °C ... 55 °C |
| | -25 °C ... 40 °C (corresponds to UL 508) |
| Ambient temperature (storage/transport) | -25 °C ... 70 °C |
| Climatic class | 3K3 (in acc. with EN 60721) |
| Permissible humidity (operation) | 15 % ... 85 % |

## Approvals

CE

| | |
|---|---|
| Certificate | CE-compliant |

UL, USA/Canada

| | |
|---|---|
| Identification | UL/C-UL Listed UL 508 |

## EMC data

| | |
|---|---|
| Electromagnetic compatibility | Conformance with EMC directive |
| Low Voltage Directive | Conformance with Low Voltage Directive |
| Noise immunity | EN 61000-6-2 |

Noise emission

| | |
|---|---|
| Standards/regulations | EN 61000-6-3 |

## Standards and regulations

| | |
|---|---|
| Standards/regulations | EN 50178 |

## Mounting

| | |
|---|---|
| Mounting type | DIN rail mounting |
| Assembly note | on standard DIN rail NS 35 in accordance with EN 60715 |
| Mounting position | any |

## Drawings

Block diagram

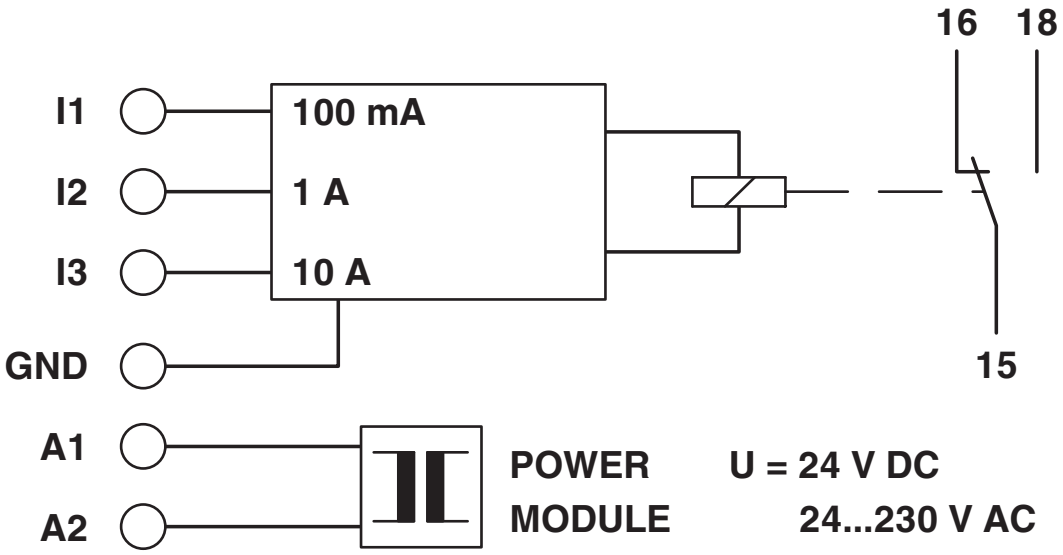

## Classifications

### ECLASS

| | |
|---|---|
| ECLASS-13.0 | 27371802 |
| ECLASS-15.0 | 27371802 |

### ETIM

| | |
|---|---|
| ETIM 10.0 | EC001440 |

### UNSPSC

| | |
|---|---|
| UNSPSC 21.0 | 41113600 |

## Environmental product compliance

EU RoHS

| | |
|---|---|
| Fulfills EU RoHS substance requirements | Yes, No exemptions |

China RoHS

| | |
|---|---|
| Environment friendly use period (EFUP) | EFUP-E |
| | No hazardous substances above the limits |

EU REACH SVHC

| | |
|---|---|
| REACH candidate substance (CAS No.) | No substance above 0.1 wt% |


Phoenix Contact 2026 © - all rights reserved
https://www.phoenixcontact.com



Phoenix Contact USA
586 Fulling Mill Road
Middletown, PA 17057, United States
(+717) 944-1300
info@phoenixcon.com