TRIO-UPS/1AC/24DC/ 5 - Uninterruptible power supply

2866611

https://www.phoenixcontact.com/us/products/2866611

Please be informed that the data shown in this PDF document is generated from our online catalog. Please find the complete data in the user documentation. Our general terms of use for downloads are valid.

CRA-READY



Uninterruptible power supply with integrated power supply unit. For lead AGM battery module MINI-BAT/24/DC/1.3 AH, QUINT-BAT/24DC 3.4 AH…12 AH nominal capacity. Input: 1-phase, output: 24 V DC/5 A. Screw connection technology. Product is being prepared for compliance with the Cyber Resilience Act (CRA).

Product description

The TRIO UPS module with integrated power supply is particularly space-saving: UPS module and power supply in one housing. Only one battery module is required to complete the UPS system.
Battery modules with lead AGM technology buffer failures lasting up to two hours with 5 A load current.

Your advantages

- Autonomous – in the event of AC mains failure the industrial PC continues operating without interruption
- Time-saving – when the supply voltage is restored, the industrial PC starts automatically

ELEKTROGERÄTE RÜCKNAHME

Commercial data

Item number	2866611
Packing unit	1 pc
Minimum order quantity	1 pc
Sales key	CM20

Product key	CMUT13
GTIN	4046356311809
Weight per piece (including packing)	1,122 g
Weight per piece (excluding packing)	939 g
Customs tariff number	85044095
Country of origin	CN

Technical data

Notes

Note on application

Note on application	As things stand now, we are preparing the product so that, as of December 11, 2027, it will comply with the requirements of the EU Cyber Resilience Act (CRA) based on the information currently available regarding the CRA.

Input data

AC operation

Nominal input voltage range	100 V AC ... 240 V AC
Input voltage range	85 V AC ... 264 V AC (Derating < 90 V AC: 2.5%V)
Voltage type of supply voltage	AC
Inrush current	< 44 A (< 1.3 A^2s)
Inrush current integral (I^2t)	< 1.3 A^2s
AC frequency range	45 Hz ... 65 Hz
Mains buffering time	see diagram
Buffer period	20 min (5 A)
Rotary selector switch	adjustable: 0.5 min; 1 min; 2 min; 3 min; 5 min; 10 min; 15 min; 20 min; PC-Mode
Current consumption	0.95 A (230 V AC)
	1.1 A (230 V AC, maximum)
	1.7 A (120 V AC)
	1.8 A (120 V AC, maximum)
Protective circuit	Transient surge protection; Varistor
Power factor	approx. 0.5
Switch-on time	150 ms (230 V AC)
Typical response time	200 ms (120 V AC)
Input fuse	6.3 A (slow-blow, internal)
Permissible backup fuse	B6 B10 B16
Recommended breaker for input protection	6 A ... 16 A (Characteristics B, C, D, K)

DC operation

Input voltage	24 V DC
Input voltage range	100 V DC ... 350 V DC (UL508: 100 ... 250 V)
Voltage type of supply voltage	DC
Frequency range DC	0 Hz

Output data

Efficiency	> 88 % (230 V AC, network operation)
	> 86 % (120 V AC, network operation)
	> 86 % (Battery operation)
Nominal output voltage	24 V DC

Setting range of the output voltage (U_{Set})	22.5 V DC ... 29.5 V DC (Network operation; in the buffer mode, dependent on the battery voltage of 27.9 V DC ... 19.2 V DC)
Nominal output current (I_N)	5 A (-25 °C ... 55 °C)
Output current limit	max. 6 A (Mains operation)
Bridging time	3600 s
Derating	55 °C ... 70 °C (2.5 %/K)
Feedback voltage resistance	35 V DC
Protection against overvoltage at the output (OVP)	< 35 V DC
Control deviation	< 1 % (change in load, static 10 % ... 90 %)
Residual ripple	< 10 mV_{PP}
Output power	120 W
Nominal power	120 W
Peak switching voltages nominal load	< 25 mV_{PP}
Maximum no-load power dissipation	2 W
Power loss nominal load max.	16 W (230 V AC)
	20 W (120 V AC)
Power dissipation battery operation	4 W
Rise time	< 100 ms
Connection in parallel	yes, 2
Connection in series	no

Mains operation

Nominal output voltage	24 V DC
Output voltage range	22.5 V DC ... 29.5 V DC
Nominal output current (I_N)	5 A

Battery operation

Nominal output voltage	24 V DC
Output voltage range	19.2 V DC ... 27.6 V DC (U_{OUT} = U_{BAT} - 0,5 V DC)
Nominal output current (I_N)	5 A

Signal

Output voltage	+ 24 V

Signal: Alarm

Output description	Transistor switching output
Maximum switching voltage	≤ 24 V
Output voltage	24 V
Continuous load current	≤ 200 mA

Signal: Battery charge

Output description	Transistor switching output
Maximum switching voltage	≤ 24 V
Output voltage	24 V
Continuous load current	≤ 200 mA

Signal: Battery mode

Output description	Transistor switching output
Maximum switching voltage	≤ 24 V
Output voltage	24 V
Continuous load current	≤ 200 mA

Energy storage

End-of-charge voltage	25 V DC ... 30 V DC (Default 27.6 V DC)
Charging current	1.5 A
Deep discharge protection	18 V DC ... 21 V DC (Default 19.2 V DC)
Memory medium	external, battery 1.3 Ah / 3.4 Ah / 7.2 Ah / 12 Ah
Battery presence check/time interval	60 s
Quality check of battery	4 h ... 200 h (Default 12 h)
Charge characteristic curve	I/U characteristic curve
IQ technology	no
Temperature compensation	0 mV/K ... 200 mV/K (42 mV/K by default)
Alarm signaling threshold	18 V DC ... 30 V DC (Default 20.4 V DC)
Network management	No

Connection data

Input

Connection method	Screw connection
Conductor cross-section, rigid min.	0.2 mm²
Conductor cross-section, rigid max.	2.5 mm²
Conductor cross-section flexible min.	0.2 mm²
Conductor cross-section flexible max.	2.5 mm²
Conductor cross-section AWG min.	24
Conductor cross-section AWG max.	12
Screw thread	M3
Tightening torque, min	0.5 Nm
Tightening torque max	0.6 Nm

Output

Connection method	Screw connection
Conductor cross-section, rigid min.	0.2 mm²
Conductor cross-section, rigid max.	2.5 mm²
Conductor cross-section flexible min.	0.2 mm²
Conductor cross-section flexible max.	2.5 mm²
Conductor cross-section AWG min.	24
Conductor cross-section AWG max.	12
Stripping length	8 mm
Screw thread	M3
Tightening torque, min	0.5 Nm
Tightening torque max	0.6 Nm

Signal

Conductor cross-section, rigid min.	0.2 mm²
Conductor cross-section, rigid max.	2.5 mm²
Conductor cross-section flexible min.	0.2 mm²
Conductor cross-section flexible max.	2.5 mm²
Conductor cross-section AWG min.	24
Conductor cross-section AWG max.	12
Screw thread	M3
Tightening torque, min	0.5 Nm
Tightening torque max	0.6 Nm

Interfaces

Interface	IFS (Interface system data port)

Signaling

Types of signaling	LED

Signal output

Status display	LED (green)
Note on status display	Mains voltage OK: Green LED, static at

Signal output: Alarm

Status display	Alarm
Note on status display	Red LED, static at

Signal output: Battery charge

Status display	Battery (battery charge) is being charged
Note on status display	Yellow LED, flashing

Signal output: Battery mode

Status display	Battery operation (Battery Mode)
Note on status display	LED yellow, static at

Electrical properties

Insulation voltage input/output	4 kV (type test)
	2 kV (routine test)
Insulation voltage output / PE	500 V DC (routine test)
Insulation voltage input / PE	2 kV AC (type test)
	2 kV AC (routine test)

Product properties

Product type	DC UPS with integrated power supply
Product family	TRIO DC UPS with integrated power supply
IQ technology	no
MTBF (IEC 61709, SN 29500)	> 596000 h (40 °C)

Insulation characteristics

Protection class	I

Degree of pollution	2

Dimensions

Width	60 mm
Height	130 mm
Depth	118 mm

Installation dimensions

Installation distance right/left	0 mm / 0 mm
Installation distance top/bottom	50 mm / 50 mm

Mounting

Mounting type	DIN rail mounting
Assembly note	alignable: horizontally 0 mm, vertically 50 mm
Mounting position	horizontal DIN rail NS 35, EN 60715

Material specifications

Housing material	Metal
Housing material	Aluminum (AlMg3) / sheet steel, zinc-plated
Type of housing	Aluminum (AlMg3) + zinc-plated sheet steel, enclosed

Environmental and real-life conditions

Ambient conditions

Degree of protection	IP20
Ambient temperature (operation)	-25 °C ... 70 °C (> 55° C derating : 2.5%/K)
Ambient temperature (storage/transport)	-40 °C ... 80 °C
Climatic class	3K3 (in acc. with EN 60721)
Max. permissible relative humidity (operation)	95 % (at 25 °C, non-condensing)
Shock	18 ms, 30g, in each space direction (according to IEC 60068-2-27)
Vibration (operation)	< 15 Hz, amplitude ±2.5 mm (according to IEC 60068-2-6)
	15 Hz ... 150 Hz, 2.3g, 90 min.

Standards and regulations

Rail applications	EN 50121-4
Standard – Electronic equipment for use in electrical power installations and their assembly into electrical power installations	EN 50178/VDE 0160 (PELV)
Standard – Limitation of mains harmonic currents	EN 61000-3-2
Standard - Electrical safety	EN 60950-1/VDE 0805 (SELV)
Standard – Protection against shock currents, basic requirements for protective separation in electrical equipment	EN 50178
Standard – Safety extra-low voltage	EN 60950-1 (SELV)
	EN 60204 (PELV)
Standard - Safe isolation	DIN VDE 0100-410

Approvals

Shipbuilding approval	DNV GL (EMC B)
UL approvals	UL/C-UL listed UL 508
	UL/C-UL Recognized UL 60950-1

EMC data

Electromagnetic compatibility	Conformance with EMC Directive 2014/30/EU
Low Voltage Directive	Conformance with Low Voltage Directive 2014/35/EC
EMC requirements for noise emission	EN 61000-6-3
	EN 61000-6-4
EMC requirements for noise immunity	EN 61000-6-1
	EN 61000-6-2

Noise emission

Standards/regulations	EN 55011 (EN 55022)

Electrostatic discharge

Standards/regulations	EN 61000-4-2
Housing	Level 3

Electrostatic discharge

Contact discharge	6 kV
Discharge in air	8 kV
Comments	Criterion B

Electromagnetic HF field

Standards/regulations	EN 61000-4-3

Electromagnetic HF field

Frequency range	80 MHz ... 2 GHz
Test field strength	10 V/m
Comments	Criterion A

Fast transients (burst)

Standards/regulations	EN 61000-4-4

Fast transients (burst)

Input	4 kV (level 4 - asymmetrical: conductor to ground)
Output	2 kV (level 4 - asymmetrical: conductor to ground)
Signal	1 kV (level 4 - asymmetrical: conductor to ground)
Comments	Criterion B

Surge voltage load (surge)

Standards/regulations	EN 61000-4-5

Surge voltage load (surge)

Input	4 kV (level 4 - asymmetrical: conductor to ground)
	2 kV (level 4 - symmetrical: conductor to conductor)
Output	2 kV (Level 3 - asymmetrical)

	1 kV (Level 3 - symmetrical)
Signal	2 kV (Level 3 - asymmetrical)
	1 kV (Level 3 - symmetrical)
Comments	Criterion B

Conducted interference

Standards/regulations	EN 61000-4-6

Conducted interference

Input/output/signal	Level 3
Frequency range	10 kHz ... 80 MHz
Comments	Criterion A
Voltage	10 V

Voltage dips

Standards/regulations	EN 61000-4-11

Emitted interference

Standards/regulations	EN 61000-6-3
Radio interference voltage in acc. with EN 55011	EN 55011 (EN 55022) Class B, area of application: Industry and residential
Emitted radio interference in acc. with EN 55011	EN 55011 (EN 55022) Class B, area of application: Industry and residential

Drawings

Diagram

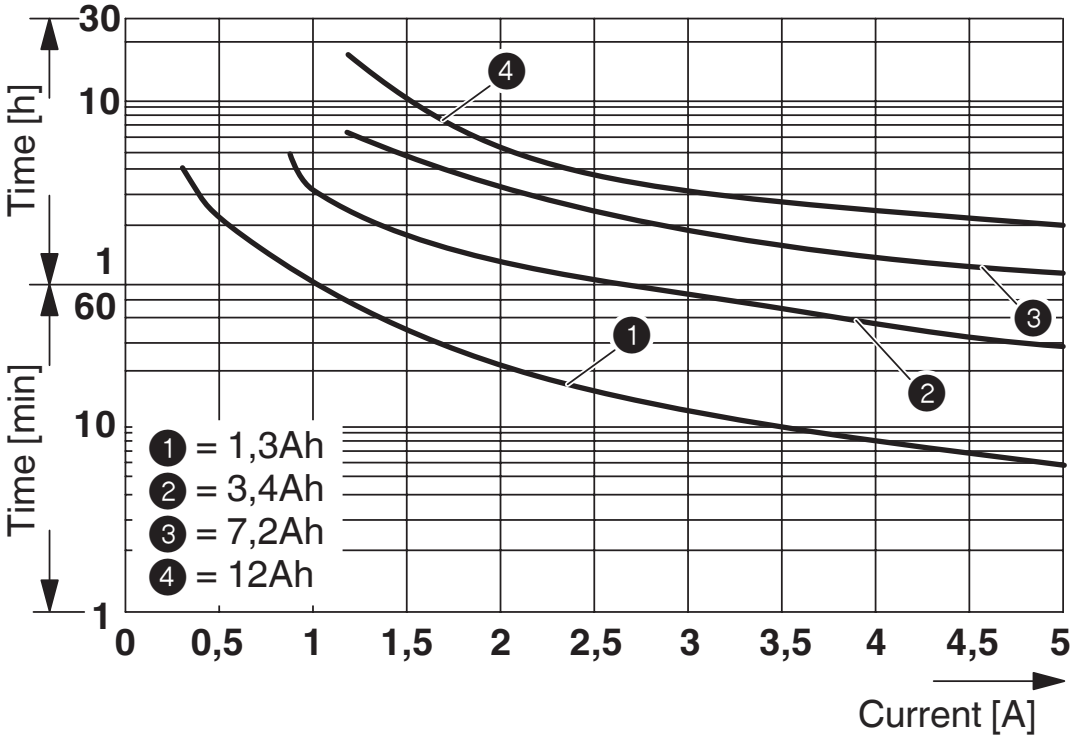

Diagram

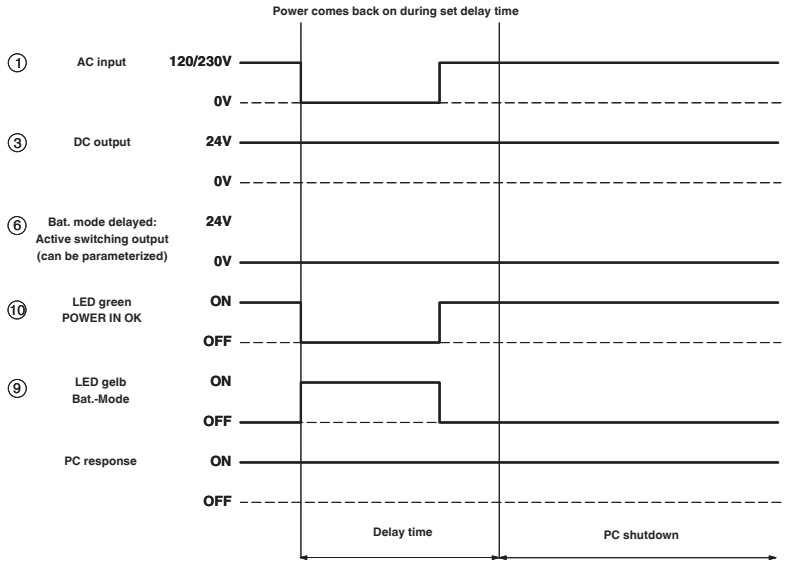

Diagram

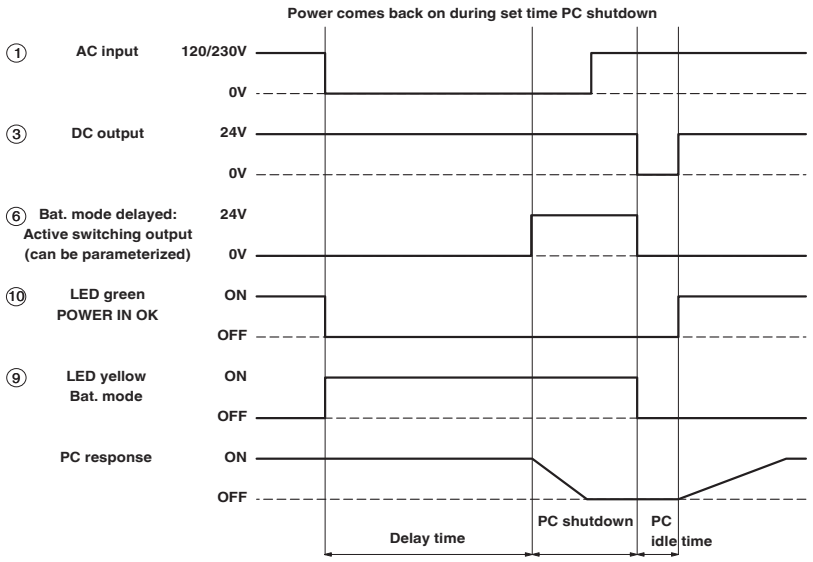

Block diagram

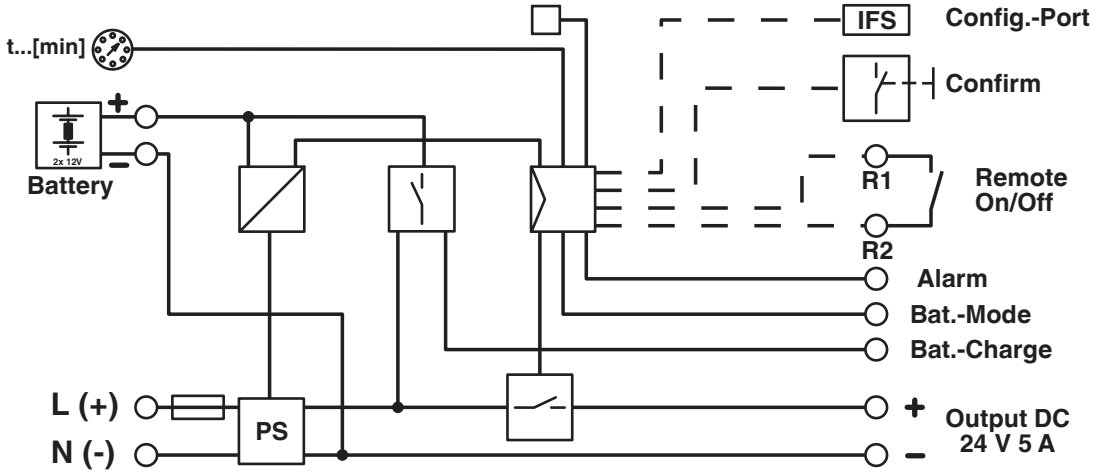

Approvals

To download certificates, visit the product detail page: https://www.phoenixcontact.com/us/products/2866611

DNV
Approval ID: TAA00000BM

cUL Recognized
Approval ID: FILE E 211944

UL Recognized
Approval ID: E211944

IECEE CB Scheme
Approval ID: DE/PTZ/0053

EAC
Approval ID: RU S-DE.BL08.W.00764

IECEE CB Scheme
Approval ID: DE/PTZ/0053

EAC
Approval ID: RU-DE.B.00184/20

UL Listed
Approval ID: E123528

cUL Listed
Approval ID: E123528

KC
Approval ID: R-R-PCK-2866611

Classifications

ECLASS

ECLASS-13.0	27040705
ECLASS-15.0	27040705

ETIM

ETIM 10.0	EC000382

UNSPSC

UNSPSC 21.0	39121000

Environmental product compliance

EU RoHS

Fulfills EU RoHS substance requirements	Yes
Exemption	7(a), 7(c)-I

China RoHS

Environment friendly use period (EFUP)	EFUP-25
	An article-related China RoHS declaration table can be found in the download area for the respective article under "Manufacturer declaration". For all articles with EFUP-E, no China RoHS declaration table issued and required.

EU REACH SVHC

REACH candidate substance (CAS No.)	Lead(CAS: 7439-92-1)
SCIP	38bd1d00-5225-4075-acab-816c2885e6bf

EF3.1 Climate Change

CO2e kg	27.394 kg CO2e

Phoenix Contact 2026 © - all rights reserved
https://www.phoenixcontact.com

Phoenix Contact USA
586 Fulling Mill Road
Middletown, PA 17057, United States
(+717) 944-1300
info@phoenixcon.com