MACX MCR-EX-SL-2NAM-T - NAMUR isolation switch amplifier

2865489

https://www.phoenixcontact.com/us/products/2865489

Please be informed that the data shown in this PDF document is generated from our online catalog. Please find the complete data in the user documentation. Our general terms of use for downloads are valid.



Ex i-NAMUR isolation switch amplifier for operating proximity sensors and switches in potentially explosive areas. The signals are transmitted to the safe area via 1 transistor output (passive) per channel. number of channels: 2, Standard configuration, 3-way isolation, Line fault detection, Safety Integrity Level (SIL, IEC 61508): 2, Systematic Capability: 3, Screw connection

Your advantages

- Power supply and error indication possible via DIN rail connector
- Up to SIL 2 in accordance with EN 61508
- Installation in zone 2, protection type "n" (EN 60079-15) permitted
- Line fault detection (LFD), can be activated/deactivated, error indicated by flashing red LED with disabling of transistor output
- Transistor signal output (passive); up to 5 kHz
- Direction of operation can be selected (operating or closed circuit current behavior)
- LED indicators for supply voltage, switching state, and malfunction in accordance with NAMUR NE 44
- 3-way electrical isolation
- 2-channel
- Input for NAMUR proximity sensors (EN 60947-5-6), floating contacts or contacts with resistance circuit, [Ex ia] IIC

Commercial data

Item number	2865489
Packing unit	1 pc
Minimum order quantity	1 pc
Sales key	C430
Product key	DK1213
GTIN	4046356160506
Weight per piece (including packing)	180 g
Weight per piece (excluding packing)	135 g
Customs tariff number	85365019
Country of origin	DE

Technical data

Product properties

Product type	Isolating switch amplifier
Product family	MACX Analog
Application	Digital IN
No. of channels	2
Configuration	DIP switches

System properties

Functionality

Configuration	DIP switches

Electrical properties

Electrical isolation	3-way isolation
Electrical isolation between input and output	yes
Line monitoring	Line fault detection

Electrical isolation

Overvoltage category	II
Pollution degree	2

Electrical isolation Input/output IEC/EN 60079-11

Standards/regulations	IEC/EN 60079-11
Rated insulation voltage	375 V_{PP}

Electrical isolation Input/supply, DIN rail connector IEC/EN 60079-11

Standards/regulations	IEC/EN 60079-11
Rated insulation voltage	375 V_{PP}

Electrical isolation Input/output/supply, DIN rail connector IEC/EN 61010-1

Standards/regulations	IEC/EN 61010-1
Rated insulation voltage	300 V_{rms}
Test voltage	2.5 kV AC (50 Hz, 60 s)
Insulation	Safe isolation

Electrical isolation Output 1/output 2 IEC/EN 61010-1

Standards/regulations	IEC/EN 61010-1
Rated insulation voltage	50 V_{rms}
Test voltage	1 kV AC (50 Hz, 60 s)
Insulation	Basic insulation

Supply

Nominal supply voltage	24 V DC -20 % ... +25 %

Supply voltage range	19.2 V DC ... 30 V DC
Max. current consumption	< 34 mA (24 V DC)
Power dissipation	≤ 1000 mW
Power consumption	0.85 W

Input data

Signal: NAMUR

Description of the input	intrinsically safe
Number of inputs	2
Available input sources	NAMUR proximity sensors (IEC/EN 60947-5-6)
	floating switch contacts
	Switch contacts with resistance circuit
Switching threshold "0" signal current	< 1.2 mA (blocking)
Switching threshold "1" signal, current	> 2.1 mA (conductive)
Short-circuit current	8 mA
Switching hysteresis	< 0.2 mA
Line fault detection	< 0.05 mA ... 0.35 mA (Line break)
	< 100 Ω ... 360 Ω (Short circuit)
	Activated /deactivated via DIP switch
Open-circuit voltage	8 V DC

Output data

Switching: Transistor

Output description	passive
Minimum switching voltage	3 V DC
Maximum switching voltage	30 V DC
Drop (ΔU)	< 1.4 V
Max. switching current	50 mA (short-circuit-proof)
Min. switching current	5 mA (short-circuit-proof)
Switching frequency	≤ 5 kHz

Signal

Number of outputs	2

Connection data

Connection method	Screw connection
Stripping length	7 mm
Screw thread	M3
Conductor cross-section rigid	0.2 mm² ... 2.5 mm²
Conductor cross-section flexible	0.2 mm² ... 2.5 mm²
Conductor cross-section AWG	24 ... 14
Tightening torque	0.5 Nm ... 0.6 Nm

Test socket

Max. diameter	2 mm

Ex data

Ex installation (EPL)	Gc
	Div. 2
Ex i circuits (EPL)	[Ga]
	[Da]
	[Ma]
	[Div. 1]

Safety data

Max. internal inductance L_i	negligible
Max. internal capacitance C_i	1.1 nF
Max. output voltage U_o	9.6 V
Max. output current I_o	10 mA
Max. output power P_o	25 mW
Safety-related maximum voltage U_m	253 V AC
	125 V DC
IIC (simple circuit): Max. external inductivity L_o / Max. external capacitance C_o	300 mH / 3.6 µF
IIB/IIIC (simple circuit): Max. external inductivity L_o / Max. external capacitance C_o	1000 mH / 26 µF
IIA (simple circuit): Max. external inductivity L_o / Max. external capacitance C_o	1000 mH / 210 µF
IIC (mixed circuit): Max. external inductivity L_o / Max. external capacitance C_o	100 mH / 510 nF, 50 mH / 580 nF, 5 mH / 600 nF
IIB/IIA/IIIC (mixed circuit): Max. external inductivity L_o / Max. external capacitance C_o	100 mH / 1 µF

Interfaces

Data

No. of channels	0

Signaling

Status display	Green LED (supply voltage)
	LED yellow (switching state)
	Red LED (line errors)

Dimensions

Dimensional drawing	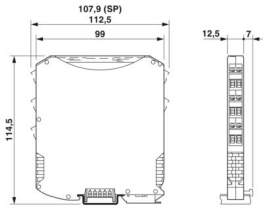
Width	12.5 mm
Height	112.5 mm
Depth	113.7 mm
Depth NS 35/7,5	114.5 mm (Snapped onto DIN rail NS 35/7,5 in accordance with EN 60715)

Material specifications

Color	gray (RAL 7042)
Flammability rating according to UL 94 (Housing)	V0 (Housing)
Housing material	PA 6.6-FR

Characteristics

Safety data

Safety Integrity Level (SIL)	2

Safety data

Safety Integrity Level (SIL)	2

Environmental and real-life conditions

Ambient conditions

Degree of protection	IP20 (not assessed by UL)
Ambient temperature (operation)	-40 °C ... 60 °C (Any mounting position)
	-40 °C ... 70 °C (Derating)
Ambient temperature (storage/transport)	-40 °C ... 80 °C
Permissible humidity (operation)	10 % ... 95 % (non-condensing)

Altitude range (≤ 2000 m)

Altitude	≤ 2000 m (The technical data refers to altitudes ≤2000 m above mean sea level. For altitudes >2000 m above mean sea level, refer to the data sheet.)
Ambient temperature (operation)	-40 °C ... 60 °C
	-40 °C ... 70 °C (Derating)
Rated insulation voltage	265 V AC/DC ($U_{Isolation\ "ec"}$: Supply, input / output)

Altitude range (≤ 3000 m)

Height range	> 2000 m ... 3000 m
Ambient temperature (operation)	-40 °C ... 54 °C

	-40 °C ... 63 °C (Derating)
Safety-related maximum voltage U_m	190 V AC
	110 V DC
Rated insulation voltage	190 V AC/DC ($U_{Isolation\ "ec"}$: Supply, input / output)

Altitude range (≤ 4000 m)

Height range	> 3000 m ... 4000 m
Ambient temperature (operation)	-40 °C ... 48 °C
	-40 °C ... 56 °C (Derating)
Safety-related maximum voltage U_m	60 V
Rated insulation voltage	60 V AC/DC ($U_{Isolation\ "ec"}$: Supply, input / output)

Altitude range (≤ 5000 m)

Height range	> 4000 m ... 5000 m
Ambient temperature (operation)	-40 °C ... 42 °C
	-40 °C ... 49 °C (Derating)
Safety-related maximum voltage U_m	60 V
Rated insulation voltage	60 V AC/DC ($U_{Isolation\ "ec"}$: Supply, input / output)

Approvals

CE

Certificate	CE-compliant
Note	and EN 61326

ATEX

Identification	Ⓔx II (1) G [Ex ia Ga] IIC
	Ⓔx II (1) D [Ex ia Da] IIIC
	Ⓔx II 3(1) G Ex ec [ia Ga] IIC T4 Gc
	Ⓔx I (M1) [Ex ia Ma] I
Certificate	IBExU 08 ATEX 1100 X

IECEx

Identification	[Ex ia Ga] IIC
	[Ex ia Da] IIIC
	Ex ec [ia Ga] IIC T4 Gc
	[Ex ia Ma] I
Certificate	IECEx IBE 08.0005X

CCC / China-Ex

Identification	[Ex ia Ga] IIC
	[Ex ia Da] IIIC
	Ex ec [ia Ga] IIC T4 Gc
Certificate	2022122316115977

UL, USA/Canada

Identification	Class I Div 2; IS for Class I, II, III Div 1
Certificate	cULus C.D.-No 83104549

Shipbuilding approval

Certificate	DNV GL TAA00000AG

Safety Integrity Level (SIL, IEC 61508)

Identification	2
Certificate	IN-AT-AS-MRL-25-00008

Systematic Capability

Identification	3

INMETRO

Identification	[Ex ia Ga] IIC
	[Ex ia Da] IIIC
	Ex ec [ia Ga] IIC T4 Gc
	[Ex ia Ma] I
Certificate	DNV 18.0141 X

Shipbuilding data

Temperature	B
Humidity	B
Vibration	A
EMC	B
Enclosure	Required protection according to the Rules shall be provided upon installation on board

EMC data

Electromagnetic compatibility	Conformance with EMC directive
Noise immunity	EN 61000-6-2

Noise emission

Standards/regulations	EN 61000-6-4

Electromagnetic HF field

Designation	Electromagnetic RF field
Standards/regulations	EN 61000-4-3
Evaluation criterion	A

Fast transients (burst)

Designation	Fast transients (burst)
Standards/regulations	EN 61000-4-4
Evaluation criterion	A

Conducted interference

Designation	Conducted interferences

Standards/regulations	EN 61000-4-6
Evaluation criterion	A

Standards and regulations

Electrical isolation	3-way isolation

GB Standard

Standards/regulations	GB/T 3836.1
	GB/T 3836.3
	GB/T 3836.4

Mounting

Mounting type	DIN rail mounting

Drawings

Dimensional drawing

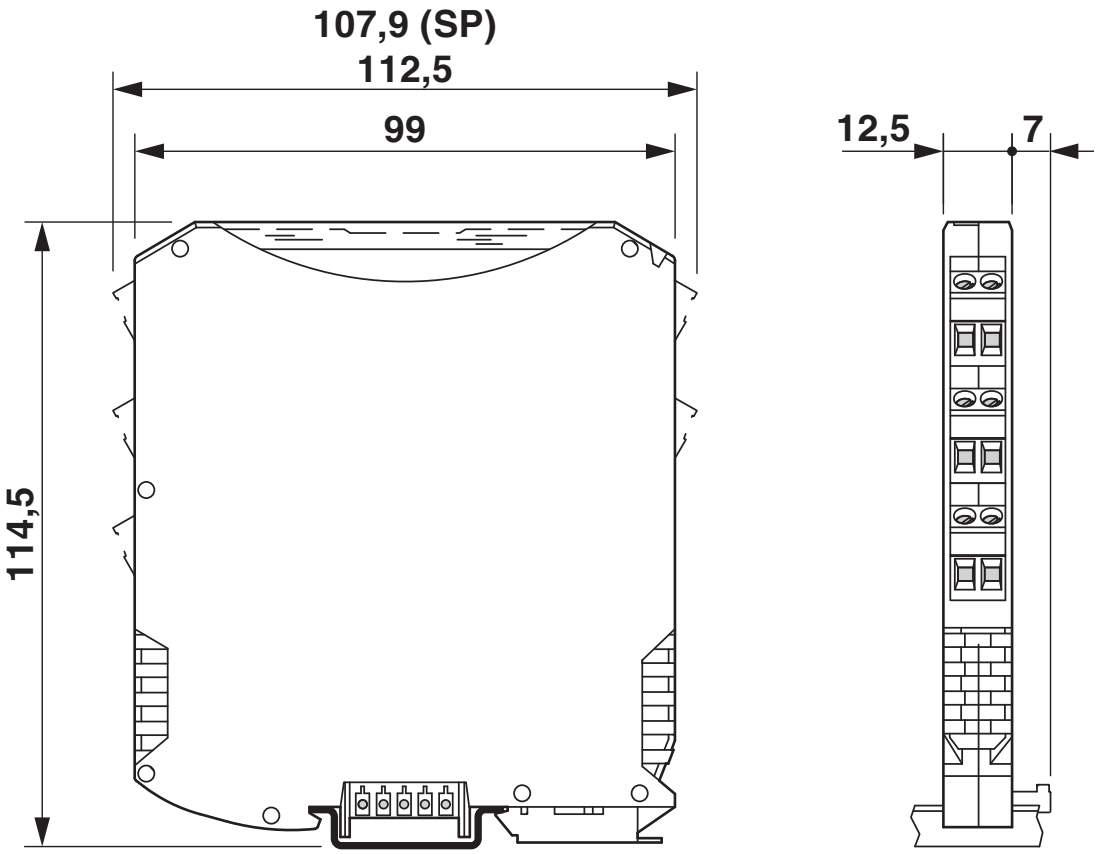

Block diagram

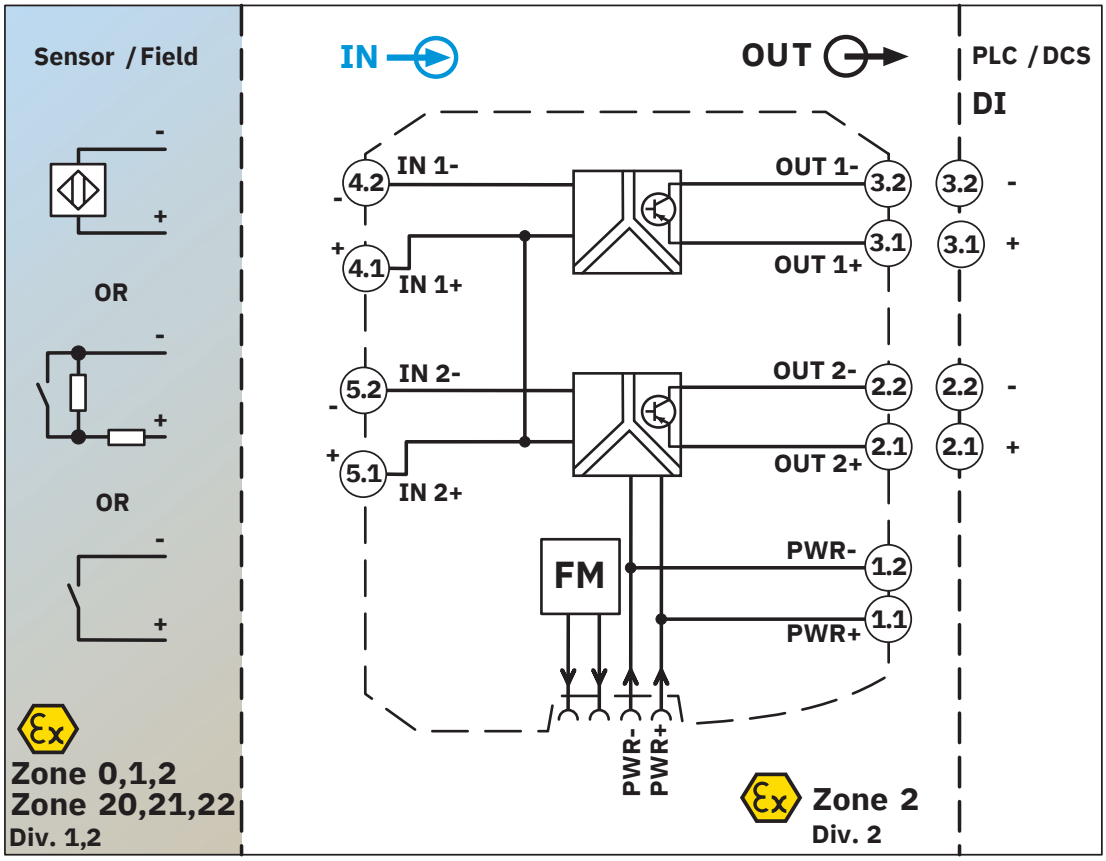

Approvals

To download certificates, visit the product detail page: https://www.phoenixcontact.com/us/products/2865489

UL Listed
Approval ID: E330267

cUL Listed
Approval ID: E330267

DNV
Approval ID: TAA00000AG

TUEV Austria FS
Approval ID: IN-AT-AS-MRL-25-0008

ECAS
Approval ID: 163682 E25 08 169507

IECEx
Approval ID: IECEx IBE 08.0005X

cUL Listed
Approval ID: E199827

UL Listed
Approval ID: E199827

ATEX
Approval ID: IBExU 08 ATEX 1100

INMETRO
Approval ID: DNV 18.0141 X

CCC
Approval ID: 2022122316115977

Classifications

ECLASS

ECLASS-13.0	27210121
ECLASS-15.0	27210121

ETIM

ETIM 10.0	EC001485

UNSPSC

UNSPSC 21.0	39121000

Environmental product compliance

EU RoHS

Fulfills EU RoHS substance requirements	Yes
Exemption	7(a), 7(c)-I

China RoHS

Environment friendly use period (EFUP)	EFUP-50
	An article-related China RoHS declaration table can be found in the download area for the respective article under "Manufacturer declaration". For all articles with EFUP-E, no China RoHS declaration table issued and required.

EU REACH SVHC

REACH candidate substance (CAS No.)	Lead(CAS: 7439-92-1)
	2,2',6,6'-tetrabromo-4,4'-isopropylidenediphenol(CAS: 79-94-7)
SCIP	7d5e8b2e-1f89-4c1b-821e-de64fc40d5f4

EF3.1 Climate Change

CO2e kg	4.604 kg CO2e

Phoenix Contact 2026 © - all rights reserved
https://www.phoenixcontact.com

Phoenix Contact USA
586 Fulling Mill Road
Middletown, PA 17057, United States
(+717) 944-1300
info@phoenixcon.com