MINI MCR-SL-UI-REL - Limit value switch

2864480

https://www.phoenixcontact.com/us/products/2864480

Please be informed that the data shown in this PDF document is generated from our online catalog. Please find the complete data in the user documentation. Our general terms of use for downloads are valid.



MCR limit value switch, with adjustable hysteresis and delay time, with screw connection

Product description

The only 6.2 mm wide configurable 3-way threshold value switch MINI MCR-SL-UI-REL... is used for the closed-loop control and monitoring of standard analog signals.
On the input side, the analog standard signals 0...20 mA or 0...10 V per DIP switch can be set. A relay with changeover contact is available on the output side. The switching thresholds are set via a potentiometer.
The DIP switches, which can be accessed on the side of the housing, have the following functions:
- Configuring the switching hysteresis,
- Configuring the operating and closed circuit current behavior,
- Setting the relay energizing times as well as
- Setting the dropout delays.

The relay status is shown by a yellow LED in the front of the housing.
Power (19.2 V DC to 30 V DC) can either be supplied via the connection terminal blocks of the modules or in conjunction with the DIN rail connector.

Your advantages

- Power supply possible via the foot element (TBUS)
- Highly-compact threshold value switch for switching analog limit values
- Status and error indication via two diagnostic LEDs
- Operating current/closed circuit current switch-over
- Changeover contact relay at the output
- Limit value can be freely adjusted via potentiometer on the front
- Input signal, hysteresis, and delay time can be configured via DIP switches
- 3-way isolation

Commercial data

Item number	2864480
Packing unit	1 pc
Minimum order quantity	1 pc
Sales key	C403
Product key	DK1137
GTIN	4017918974879
Weight per piece (including packing)	64.9 g
Weight per piece (excluding packing)	55.9 g
Customs tariff number	85437090

Country of origin	DE

Technical data

Notes

Utilization restriction

EMC note	EMC: class A product, see manufacturer's declaration in the download area

Product properties

Product type	Limit value switch
Product family	MINI Analog
No. of channels	1
Configuration	DIP switches

System properties

Functionality

Configuration	DIP switches

Electrical properties

Electrical isolation	3-way isolation
Electrical isolation between input and output	yes
Maximum power dissipation for nominal condition	< 405 mW
Switching point accuracy	< 0.05 %
Step response (0–99%)	< 35 ms
Maximum temperature coefficient	< 0.02 %/K

Electrical isolation

Overvoltage category	II
Pollution degree	2

Electrical isolation Input/power supply IEC/EN 61010

Standards/regulations	IEC/EN 61010
Rated insulation voltage	50 V AC/DC
Test voltage	1.5 kV AC (50 Hz, 60 s)
Insulation	Basic insulation

Supply

Nominal supply voltage	24 V DC ±15 %
Supply voltage range	19.2 V DC ... 30 V DC (The DIN rail connector (ME 6,2 TBUS-2 1,5/5-ST-3,81 GN, item no. 2869728) can be used to bridge the supply voltage. It can be snapped onto a 35 mm DIN rail in accordance with EN 60715)
Max. current consumption	< 14 mA (at 24 V DC)
Power consumption	< 330 mW (at 24 V DC)

Input data

Signal: Voltage/current

Number of inputs	1
Voltage input signal	0 V ... 10 V
Max. voltage input signal	30 V
Current input signal	0 mA ... 20 mA
Max. current input signal	100 mA
Input resistance of voltage input	> 100 kΩ
Input resistance current input	50 Ω
Specification of the switching point	With 25-speed potentiometer

Output data

Switching: Relay

Contact switching type	1 changeover contact
Contact material	$AgSnO_2$, hard gold-plated
Maximum switching voltage	250 V AC
	240 V AC (UL)
Limiting continuous current	2 A
Setting range of the response delay	0 s ... 10 s (0 s, 1 s, 2 s, 3 s, 4 s, 6 s 8 s, 10 s)
Internal hysteresis	0.1 %, 1 %, 2.5 %, 5 %

Signal

Number of outputs	1

Connection data

Connection method	Screw connection
Stripping length	12 mm
Screw thread	M3
Conductor cross-section rigid	0.2 mm² ... 2.5 mm²
Conductor cross-section flexible	0.2 mm² ... 2.5 mm²
Conductor cross-section AWG	26 ... 12

Dimensions

Dimensional drawing	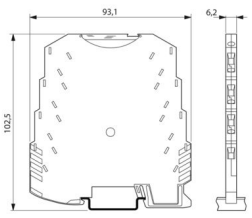
Width	6.2 mm
Height	93.1 mm
Depth	101.2 mm

Material specifications

Color	green (RAL 6021)
Housing material	PBT
Fire protection for rail vehicles (DIN EN 45545-2) R22	HL 1 - HL 2
Fire protection for rail vehicles (DIN EN 45545-2) R23	HL 1 - HL 2
Fire protection for rail vehicles (DIN EN 45545-2) R24	HL 1 - HL 2

Environmental and real-life conditions

Ambient conditions

Degree of protection	IP20
Ambient temperature (operation)	-20 °C ... 65 °C
Ambient temperature (storage/transport)	-40 °C ... 85 °C
Altitude	≤ 2000 m
Permissible humidity (operation)	5 % ... 95 % (non-condensing)

Approvals

CE

Certificate	CE-compliant

UL, USA

Identification	Class I, Zone 2, AEx nA nC IIC T5

UL, USA/Canada

Identification	UL 508 Recognized

UL, Canada

Identification	Class I, Zone 2, Ex nA nC IIC T5 Gc

EMC data

Electromagnetic compatibility	Conformance with EMC directive
Noise immunity	EN 61000-6-2
Note	When being exposed to interference, there may be minimal deviations.

Noise emission

Standards/regulations	EN 61000-6-4

Electrostatic discharge

Standards/regulations	EN 61000-4-2

Electrostatic discharge

Comments	Safety measures must be taken to prevent electrostatic discharge.

Electromagnetic HF field

Designation	Electromagnetic RF field
Standards/regulations	EN 61000-4-3
Typical deviation from the upper range value	5 %

Fast transients (burst)

Designation	Fast transients (burst)
Standards/regulations	EN 61000-4-4
Typical deviation from the upper range value	5 %

Surge current load (surge)

Standards/regulations	EN 61000-4-5

Surge current load (surge)

Comments	Criterion B

Conducted interference

Designation	Conducted interferences
Standards/regulations	EN 61000-4-6
Typical deviation from the upper range value	5 %

Standards and regulations

Electrical isolation	3-way isolation

Mounting

Mounting type	DIN rail mounting
Assembly note	The DIN rail connector can be used for bridging the supply voltage. It can be snapped onto a 35 mm EN 60715 DIN rail.
Mounting position	any

Drawings

Dimensional drawing

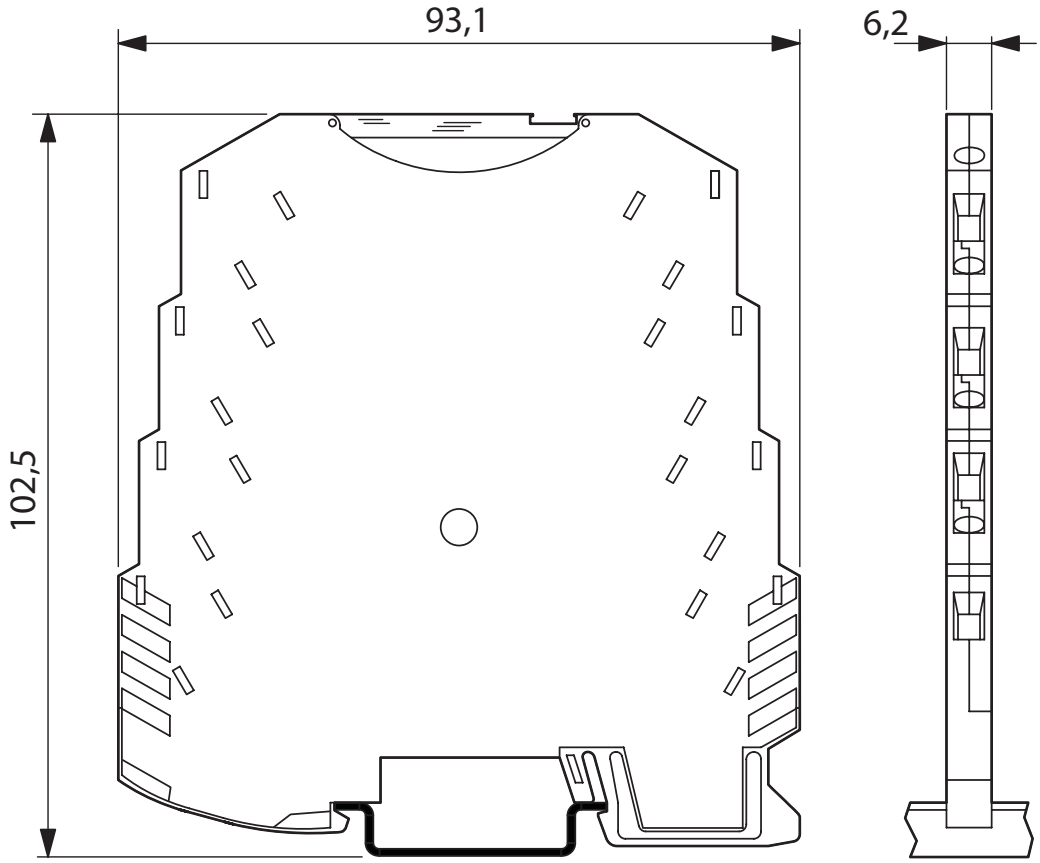

Block diagram

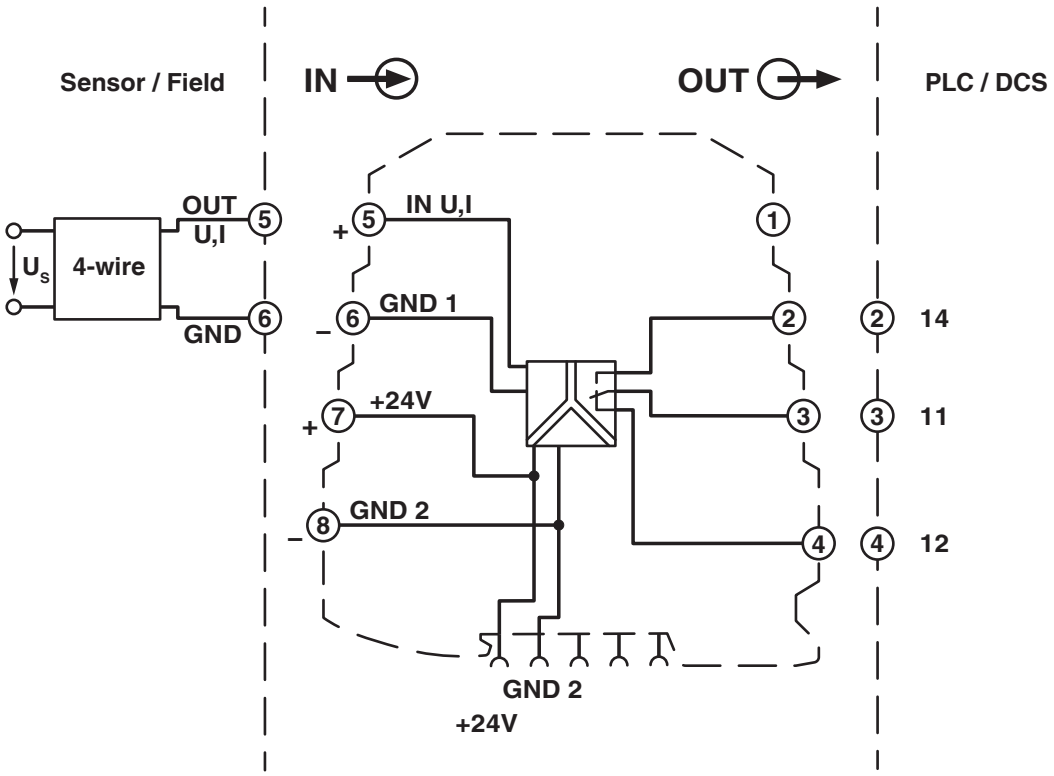

Approvals

To download certificates, visit the product detail page: https://www.phoenixcontact.com/us/products/2864480

cUL Recognized
Approval ID: E238705

UL Recognized
Approval ID: E238705

cUL Listed
Approval ID: FILE E 199827

UL Listed
Approval ID: E199827

Classifications

ECLASS

ECLASS-13.0	27210120
ECLASS-15.0	27210120

ETIM

ETIM 10.0	EC002653

UNSPSC

UNSPSC 21.0	39121000

Environmental product compliance

EU RoHS

Fulfills EU RoHS substance requirements	Yes
Exemption	6(c), 7(a), 7(c)-I

China RoHS

Environment friendly use period (EFUP)	EFUP-50
	An article-related China RoHS declaration table can be found in the download area for the respective article under "Manufacturer declaration". For all articles with EFUP-E, no China RoHS declaration table issued and required.

EU REACH SVHC

REACH candidate substance (CAS No.)	Lead(CAS: 7439-92-1)
SCIP	58915e49-d3e5-449c-801c-63c44f8adc58

Phoenix Contact 2026 © - all rights reserved
https://www.phoenixcontact.com

Phoenix Contact USA
586 Fulling Mill Road
Middletown, PA 17057, United States
(+717) 944-1300
info@phoenixcon.com