IB IL RS 485/422-2MBD-PAC - Communication module

2862097

https://www.phoenixcontact.com/us/products/2862097

Please be informed that the data shown in this PDF document is generated from our online catalog. Please find the complete data in the user documentation. Our general terms of use for downloads are valid.



Inline, Communication module, Serial data transmission; Communication via PCP; interface: RS-485, RS-422: 1 (be operated simultaneously); Transmission speed: 110 bps ... 38400 bps; transmission speed in the local bus: 2 Mbps; degree of protection: IP20; Scope of supply: including Inline connectors and marking fields

Product description

Inline terminals with “2 MBD” added to their item designation work with a transmission speed of 2 Mbps. These terminal blocks are discontinued or no longer in the range. If you require this transmission speed, please ask your local Phoenix Contact representative. If you can work with a transmission speed of 500 kbps, select as a replacement the corresponding variant that does not have “2MBD” added to its item designation. Please note that a uniform transmission speed must always be used within one inline station. The terminal is designed for use within an Inline station. The terminal can be used to operate standard I/O devices with serial interfaces on a bus system.

Your advantages

- 1 serial input and output channel as RS-485 or RS-422 version
- Various protocols supported
- Transmission speed can be set up to 38400 bps
- Number of data bits, stop bits and parity can be set
- 4 kbyte receive buffer and 1 kbyte transmit buffer
- Parameterization and data exchange via PCP

ELEKTROGERÄTE RÜCKNAHME

Commercial data

Item number	2862097
Packing unit	1 pc
Minimum order quantity	1 pc
Product key	DRI151
GTIN	4017918974725
Weight per piece (including packing)	149.5 g

Weight per piece (excluding packing)	135 g
Country of origin	DE

Technical data

Dimensions

Dimensional drawing	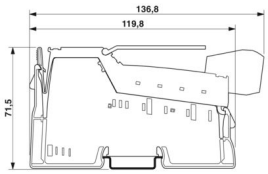
Width	24.4 mm
Height	135 mm
Depth	71.5 mm

Notes

Note on application	Only for industrial use

Mounting

Mounting type	DIN rail mounting

Material specifications

Color (Housing)	green (RAL 6021)

Interfaces

Inline local bus

Number of interfaces	2
Connection method	Inline data jumper
Transmission speed	2 Mbps

RS-485, RS-422

Number of interfaces	1 (be operated simultaneously)
Connection method	Spring-cage connection
Note on the connection method	Use shielded cables.
Transmission speed	110 bps ... 38400 bps (can be parameterized)
Transmission physics	Copper
Protocols supported	Transparent, end-to-end, XON/XOFF, dual buffer, 3964R, Modbus/RTU, Modbus/ASCII
Input buffer	4 kByte
Output buffer	1 kByte
Data bits	7 or 8
Stop bits	1 or 2
Termination resistor	typ. 120 Ω (active, integrated)
Idle time	208 µs (between sending and receiving data)

System properties

Programming data

Length code (hex)	01
ID code (dec.)	220
Length code (dec)	01
Process data channel	16 bit
Input address area	2 Byte
Output address area	2 Byte
Parameter channel (PCP)	4 Byte
Register length (bus)	48 bit

Fieldbus data telegram (PROFIBUS)

Required parameter data	27 Byte
Required configuration data	5 Byte

Product properties

Product type	I/O component
Product family	Inline
Type	modular
Scope of supply	including Inline connectors and marking fields
Special properties	Communication via PCP

Insulation characteristics

Overvoltage category	II (IEC 60664-1, EN 60664-1)
Pollution degree	2 (IEC 60664-1, EN 60664-1)

Electrical properties

Maximum power dissipation for nominal condition	2 W

Potentials: Communications power (U_L)

Supply voltage	7.5 V DC (via voltage jumper)
Current draw	max. 260 mA (all connections of the serial interface are short-circuited)
	typ. 185 mA

Connection data

Connection technology

Connection name	Inline connector

Inline connector

Connection method	Spring-cage connection
Conductor cross-section, rigid	0.08 mm² ... 1.5 mm²
Conductor cross-section, flexible	0.08 mm² ... 1.5 mm²
Conductor cross-section AWG	28 ... 16
Stripping length	8 mm

Environmental and real-life conditions

Ambient conditions

Ambient temperature (operation)	-25 °C ... 55 °C
Degree of protection	IP20
Air pressure (operation)	70 kPa ... 106 kPa (up to 3000 m above sea level)
Air pressure (storage/transport)	70 kPa ... 106 kPa (up to 3000 m above sea level)
Ambient temperature (storage/transport)	-25 °C ... 85 °C
Permissible humidity (operation)	10 % ... 95 % (non-condensing)
Permissible humidity (storage/transport)	10 % ... 95 % (non-condensing)

Mechanical test

Vibration resistance in accordance with EN 60068-2-6/IEC 60068-2-6	5g
Shock in accordance with EN 60068-2-27/IEC 60068-2-27	25g

Standards and regulations

Protection class	III (IEC 61140, EN 61140, VDE 0140-1)

Drawings

Dimensional drawing

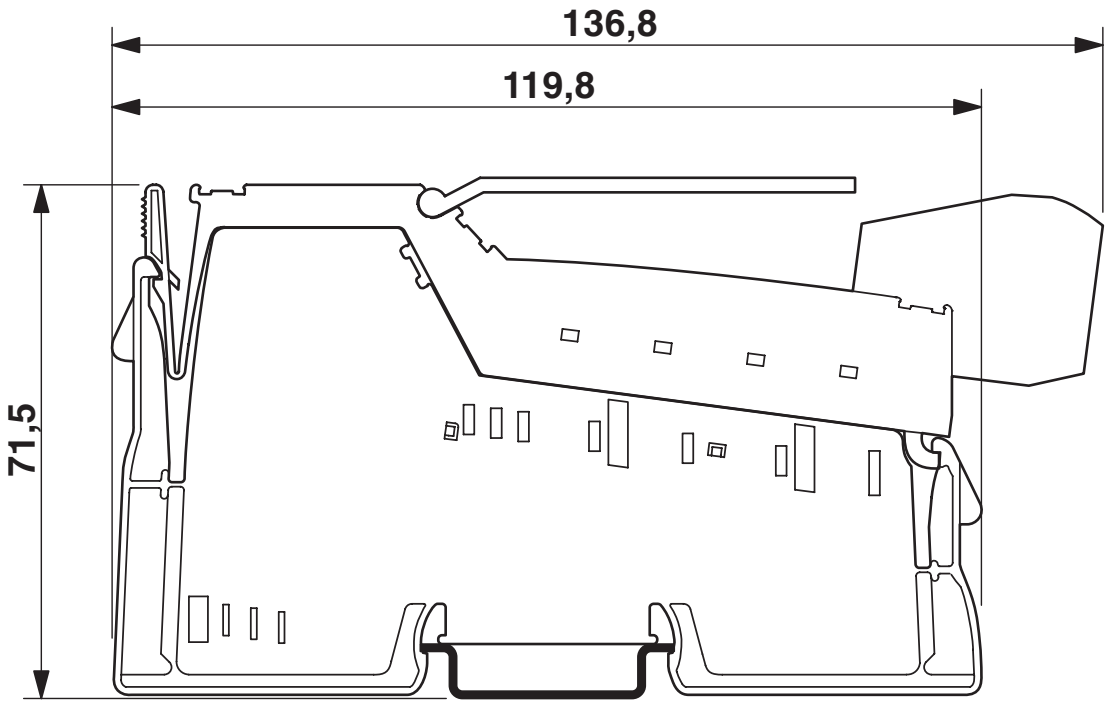

Dimensions

Connection diagram

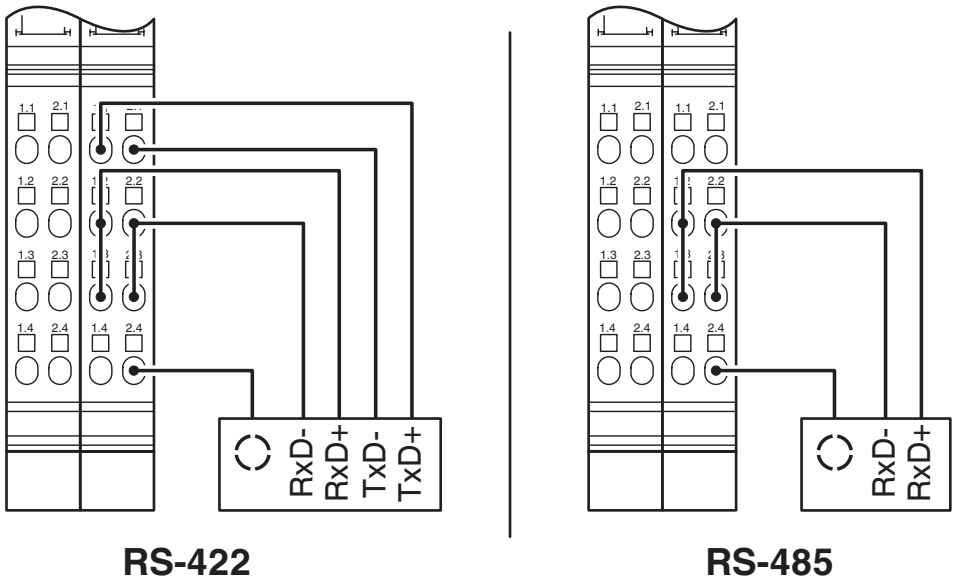

Block diagram

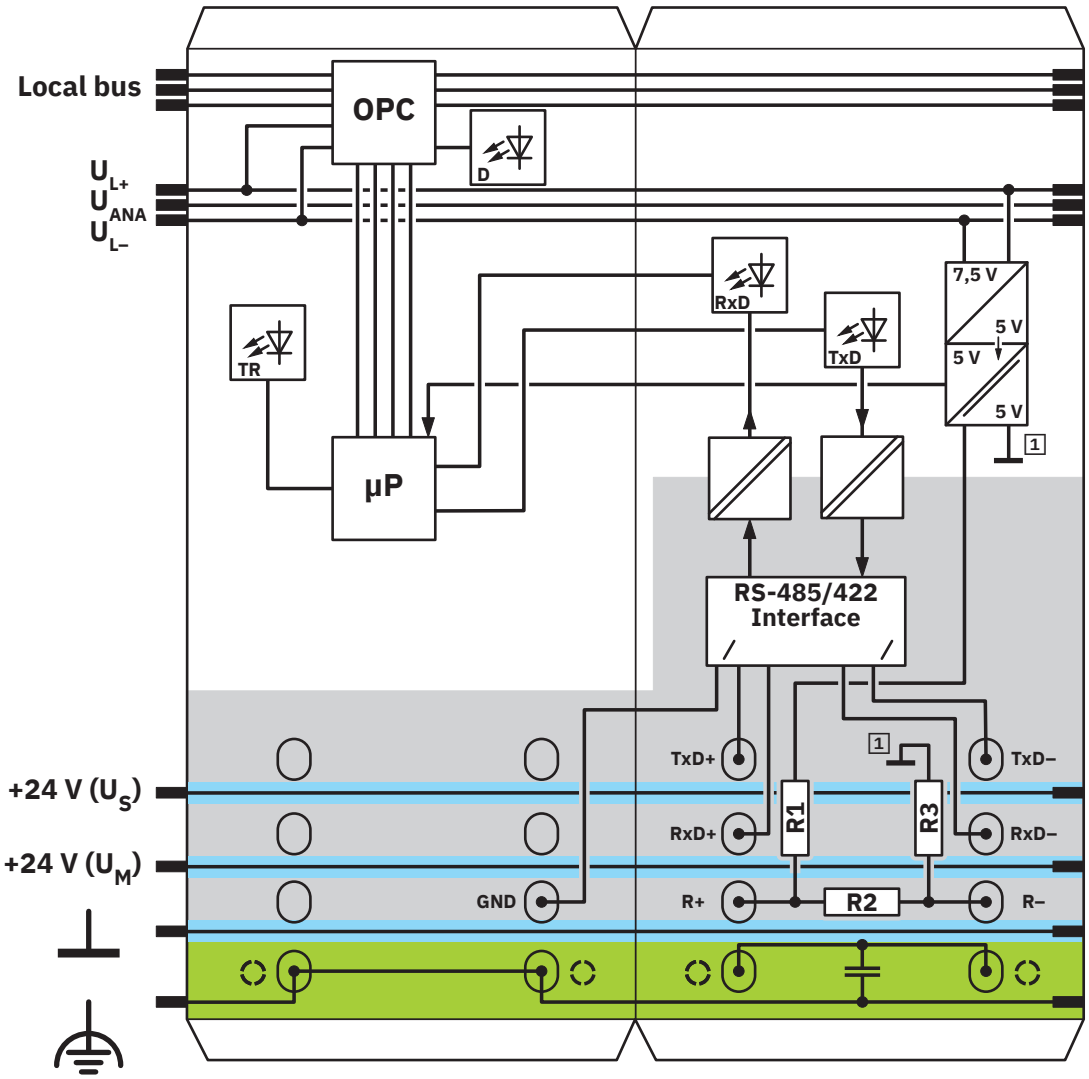

Internal wiring of the terminal points

Classifications

ECLASS

ECLASS-13.0	27242608
ECLASS-15.0	27242608

ETIM

ETIM 10.0	EC001604

UNSPSC

UNSPSC 21.0	32151600

Environmental product compliance

EU RoHS

Fulfills EU RoHS substance requirements	Yes
Exemption	7(a), 7(c)-I

China RoHS

Environment friendly use period (EFUP)	EFUP-50
	An article-related China RoHS declaration table can be found in the download area for the respective article under "Manufacturer declaration". For all articles with EFUP-E, no China RoHS declaration table issued and required.

EU REACH SVHC

REACH candidate substance (CAS No.)	Lead(CAS: 7439-92-1)
SCIP	0f9b5130-5b22-4ee6-9560-0c1578426e61

Phoenix Contact 2026 © - all rights reserved
https://www.phoenixcontact.com

Phoenix Contact USA
586 Fulling Mill Road
Middletown, PA 17057, United States
(+717) 944-1300
info@phoenixcon.com