IB IL 24/230 DOR1/W-PAC - Relay module

2861881

https://www.phoenixcontact.com/us/products/2861881

Please be informed that the data shown in this PDF document is generated from our online catalog. Please find the complete data in the user documentation. Our general terms of use for downloads are valid.

CRA-READY



Inline, Relay terminal, Relay output: 1 (floating), Changeover contact, 24 V DC, 230 V AC, for switching ohmic loads, transmission speed in the local bus: 500 kbps, degree of protection: IP20, including Inline connector and labeling field; The product is being prepared for compliance with the Cyber Resilience Act (CRA).

Product description

The terminal is designed for use within an Inline station. It has one floating relay changeover contact. You can use the terminal block in protective extra-low voltage applications and in AC applications. When using the terminal block in AC applications, be sure to follow the applicable regulations and safety notes.

Your advantages

- Safe isolation
- Floating connection for one actuator
- Nominal current at the output: 3 A
- Total current of the terminal: 3 A

ELEKTROGERÄTE RÜCKNAHME

Commercial data

Item number	2861881
Packing unit	1 pc
Minimum order quantity	1 pc

Sales key	DR01
Product key	DRI133
GTIN	4017918894580
Weight per piece (including packing)	79.6 g
Weight per piece (excluding packing)	46 g
Customs tariff number	85389099
Country of origin	DE

Technical data

Dimensions

Dimensional drawing	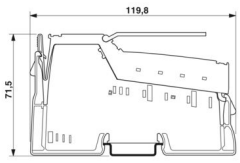
Width	12.2 mm
Height	119.8 mm
Depth	71.5 mm
Note on dimensions	Housing dimensions

Notes

Note on application	Only for industrial use
Note on application	As things stand now, we are preparing the product so that, as of December 11, 2027, it will comply with the requirements of the EU Cyber Resilience Act (CRA) based on the information currently available regarding the CRA.

Utilization restriction

CCCex note	Use in potentially explosive areas is not permitted in China.

Mounting

Mounting type	DIN rail mounting

Material specifications

Color (Housing)	gray (RAL 7042)

Interfaces

Inline local bus

Number of interfaces	2
Connection method	Inline data jumper
Transmission speed	500 kbps

System properties

Programming data

Length code (hex)	C2
ID code (dec.)	189
Length code (dec)	194
Process data channel	2 bit
Input address area	0 Byte

Output address area	2 bit (Only bit0 is occupied)
Parameter channel (PCP)	0 bit
Register length (bus)	2 bit

Fieldbus data telegram (PROFIBUS)

Required parameter data	3 Byte
Required configuration data	4 Byte

Output data

Relay

Number of outputs	1 (floating)
Connection method	Spring-cage connection
Contact switching type	Changeover contact
Contact material	$AgSnO_2$, hard gold-plated
Contact resistance	≤ 50 mΩ (at 100 mA/6 V)
Nominal output voltage (DC)	24 V DC
Nominal output voltage (AC)	230 V AC
Output voltage range (AC)	5 V AC ... 253 V AC
Output current (max. per channel)	max. 3 A (per channel)
Output current (max. per module)	max. 3 A (per module)
Inrush current	max. 6 A (for 200 µs, with lamp loads and capacitive loads)
Switching voltage	min. 5 V DC
	max. 250 V DC
	max. 253 V AC
Switching current	max. 3 A (At 30 V DC)
	max. 0.15 A (for 250 V DC)
	max. 3 A (at 253 V AC)
Limiting continuous current	3 A
Switching power	max. 750 VA (see to derating)
Switching frequency	max. 20 Hz (without load)
	max. 0.1 Hz (with load)
Coil resistance	119 Ω ±12 Ω (at 20 °C)
Typical response time	typ. 5 ms
Bouncing time	typ. 5 ms
Typical release time	typ. 6 ms
Service life electrical	10^5 switching cycles (at 20 switching cycles per minute)
Mechanical service life	2x 10^7 cycles
Common potentials	all contacts floating

Product properties

Product type	I/O component
Product family	Inline
Type	modular
Installation location	Control cabinet

Scope of supply	including Inline connector and labeling field
Operating mode	Process data mode with 2 bits
Special properties	The product is being prepared for compliance with the Cyber Resilience Act (CRA)
	for switching ohmic loads

Insulation characteristics

Protection class	II (IEC 61140, EN 61140, VDE 0140-1) ()
Overvoltage category	III (IEC 60664-1, EN 60664-1)
Pollution degree	2 (IEC 60664-1, EN 60664-1)

Electrical properties

Maximum power dissipation for nominal condition	0.9 W

Potentials: Communications power (U_L)

Supply voltage	7.5 V DC (via voltage jumper)
Current draw	max. 60 mA

Electrical isolation/isolation of the voltage ranges

Test voltage: Relay contact / Bus logics	4 kV, 50 Hz, 1 min
Test voltage: Contact/contact	1 kV, 50 Hz, 1 min
Test voltage: Contact / PE	1 kV, 50 Hz, 1 min

Connection data

Connection technology

Connection name	Inline connector

Inline connector

Connection method	Spring-cage connection
Conductor cross-section, rigid	0.08 mm² ... 1.5 mm²
Conductor cross-section, flexible	0.08 mm² ... 1.5 mm²
Conductor cross-section AWG	28 ... 16
Stripping length	8 mm

Environmental and real-life conditions

Ambient conditions

Ambient temperature (operation)	-25 °C ... 55 °C
Degree of protection	IP20
Air pressure (operation)	80 kPa ... 106 kPa (up to 2000 m above sea level)
Air pressure (storage/transport)	70 kPa ... 106 kPa (up to 3000 m above sea level)
Ambient temperature (storage/transport)	-25 °C ... 85 °C
Permissible humidity (operation)	10 % ... 95 % (non-condensing)
Permissible humidity (storage/transport)	10 % ... 95 % (non-condensing)

Mechanical test

Vibration resistance in accordance with EN 60068-2-6/IEC 60068-2-6	2g
Shock in accordance with EN 60068-2-27/IEC 60068-2-27	2g

Drawings

Dimensional drawing

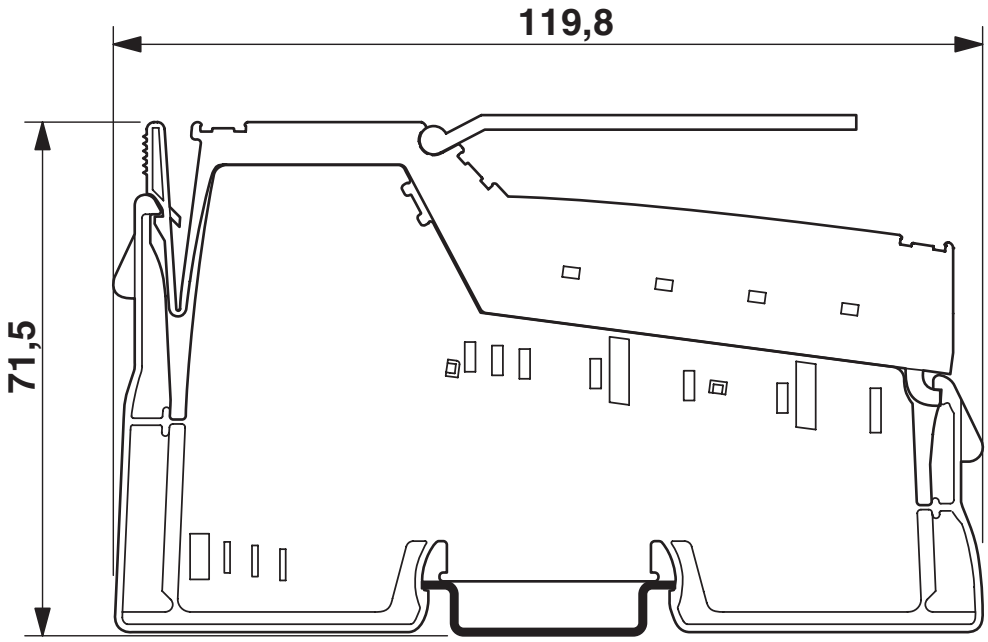

Dimensions (in mm)

Connection diagram

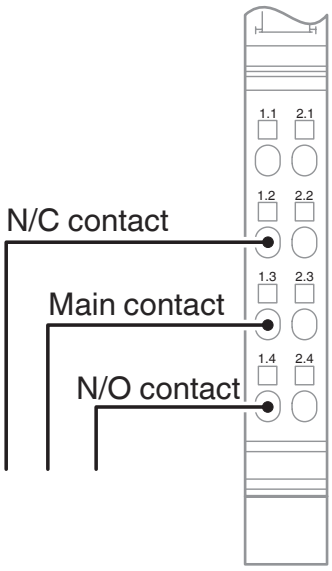

Block diagram

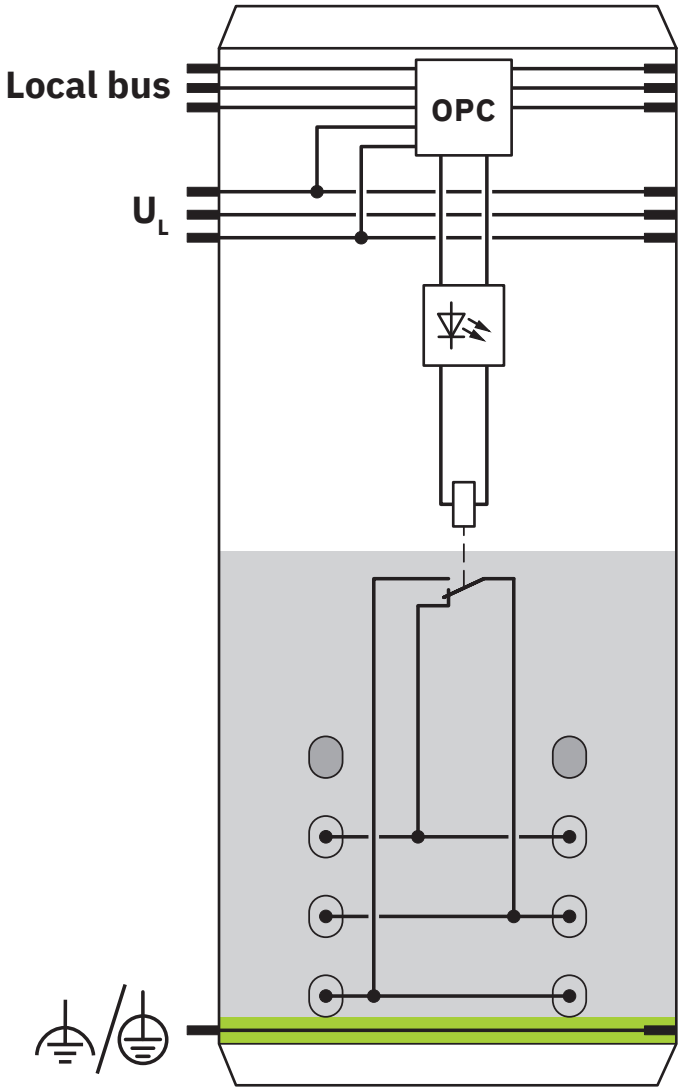

Approvals

To download certificates, visit the product detail page: https://www.phoenixcontact.com/us/products/2861881

BV
Approval ID: 21725/C1 BV

ABS
Approval ID: 22-2226444-PDA

cULus Recognized
Approval ID: E140324

cULus Listed
Approval ID: E199827

Classifications

ECLASS

ECLASS-13.0	27242604
ECLASS-15.0	27242604

ETIM

ETIM 10.0	EC001599

UNSPSC

UNSPSC 21.0	32151600

Environmental product compliance

EU RoHS

Fulfills EU RoHS substance requirements	Yes
Exemption	7(a), 7(c)-I

China RoHS

Environment friendly use period (EFUP)	EFUP-50
	An article-related China RoHS declaration table can be found in the download area for the respective article under "Manufacturer declaration". For all articles with EFUP-E, no China RoHS declaration table issued and required.

EU REACH SVHC

REACH candidate substance (CAS No.)	Lead(CAS: 7439-92-1)
SCIP	13c16034-a8ca-443c-a470-e16f445a66c3

Phoenix Contact 2026 © - all rights reserved
https://www.phoenixcontact.com

Phoenix Contact USA
586 Fulling Mill Road
Middletown, PA 17057, United States
(+717) 944-1300
info@phoenixcon.com