C-TV-SAT - Surge protection device

2856993

https://www.phoenixcontact.com/us/products/2856993

Please be informed that the data shown in this PDF document is generated from our online catalog. Please find the complete data in the user documentation. Our general terms of use for downloads are valid.



Attachment plug with surge protection for antenna inputs with F connector

Your advantages

- No signal interference with optimum transmission properties
- Space-saving, thanks to the compact design
- Ideal addition to the C-SAT-Box for direct end-device protection

Commercial data

Item number	2856993
Packing unit	1 pc
Minimum order quantity	1 pc
Sales key	CL25
Product key	CL3314
GTIN	4017918915179
Weight per piece (including packing)	73 g
Weight per piece (excluding packing)	49.66 g
Customs tariff number	85363010
Country of origin	DE

Technical data

Product properties

Product type	Surge protection for transceiver systems
IEC test classification	C1
	C2
	C3
	D1
Type	Intermediate plug
Number of positions	1
Surge protection fault message	none

Insulation characteristics

Overvoltage category	II
Pollution degree	2

Connection data

Connection method	F connector

Dimensions

Dimensional drawing	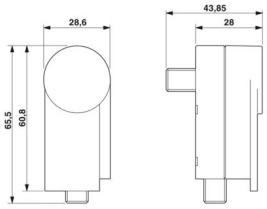
Width	28 mm
Height	44 mm
Depth	66 mm

Material specifications

Color	black (RAL 9005)
Flammability rating according to UL 94	V-0
Housing material	PA 6.6

Mechanical properties

Mechanical data

Open side panel	No

Protective circuit

Direction of action	Line-Shield/Earth Ground
Maximum continuous operating voltage U_C	24 V DC
Rated current	1.5 A (25 °C)

Operating effective current I_C at U_C	≤ 1 µA
Protective conductor current I_{PE}	≤ 1 µA
Nominal discharge current I_n (8/20) µs (line-shield)	2.5 kA
Pulse discharge current I_{imp} (10/350) µs	0.5 kA
Nominal pulse current Ian (10/1000) µs (line-shield)	120 A
Output voltage limitation at 1 kV/µs (line-shield) spike	≤ 600 V
Output voltage limitation at 1 kV/µs (line-shield) static	≤ 600 V
Residual voltage at I_n (conductor-shield)	≤ 30 V
Voltage protection level U_p (line-shield)	≤ 700 V (C2 - 4 kV / 2 kA)
	≤ 800 V (C2 - 5 kV/2,5 kA)
Response time tA (line-shield)	≤ 100 ns
Input attenuation aE, asym.	typ. 0.5 dB (≤ 2.4 GHz /75 Ω)
Cut-off frequency fg (3 dB), asym. (shield) in 75 Ω system	> 3 GHz
Frequency range	4.7 MHz ... 2.5 GHz
Capacity asymmetrical (shield)	typ. 10 pF
Surge protection fault message	none
Impulse durability (line-shield)	C2 - 4 kV/2 kA
	C2 - 5 kV / 2.5 kA
	C3 - 100 A
	D1 - 500 A
Alternating current carrying capacity (line-shield)	5 A - 1 s
Pulse reset time (line-shield)	< 3 s

Environmental and real-life conditions

Ambient conditions

Degree of protection	IP20
Ambient temperature (operation)	-25 °C ... 75 °C
Altitude	≤ 2000 m (amsl)

Standards and regulations

Standards/specifications	IEC 61643-21
Note	2012
Standards/specifications	EN 61643-21
Note	2013
Standards/specifications	EN 50083
Note	CLASS-A

Mounting

Mounting type	Connection-specific intermediate plugging

Drawings

Dimensional drawing

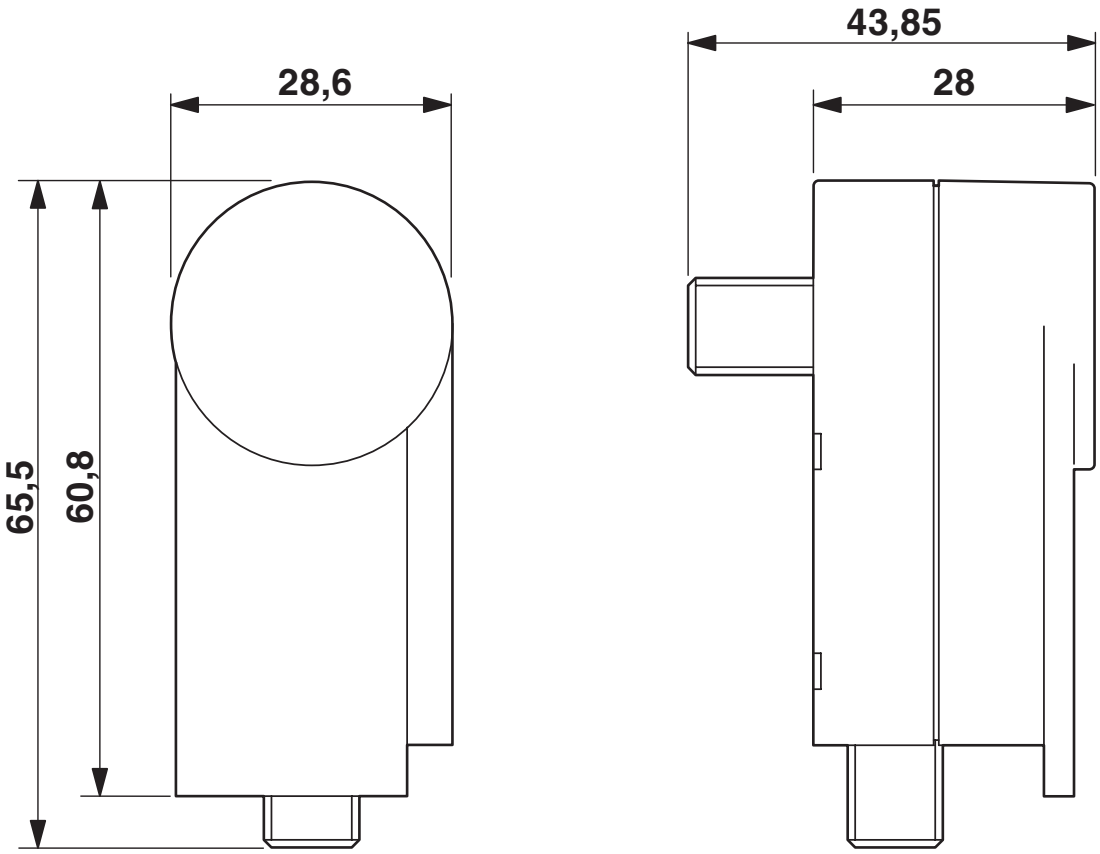

Circuit diagram

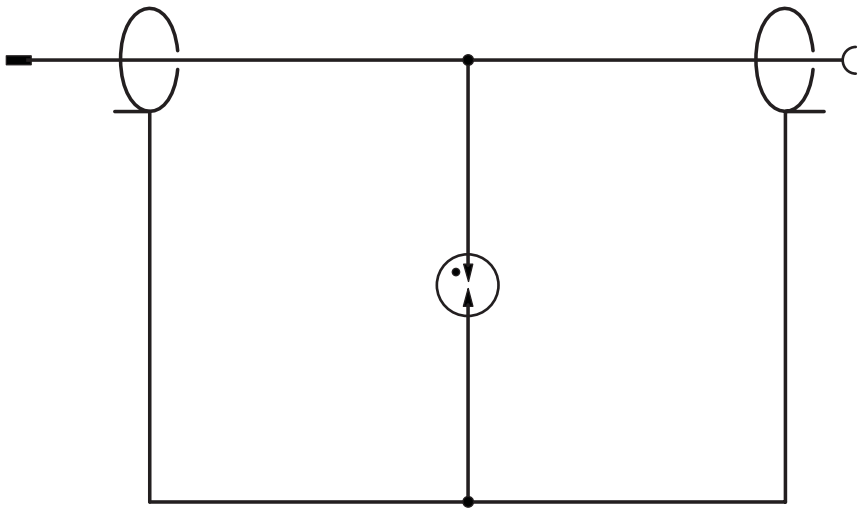

Classifications

ECLASS

ECLASS-13.0	27171504
ECLASS-15.0	27171504

ETIM

ETIM 10.0	EC001466

UNSPSC

UNSPSC 21.0	39121600

Environmental product compliance

EU RoHS

Fulfills EU RoHS substance requirements	Yes
Exemption	6(c)

China RoHS

Environment friendly use period (EFUP)	EFUP-50
	An article-related China RoHS declaration table can be found in the download area for the respective article under "Manufacturer declaration". For all articles with EFUP-E, no China RoHS declaration table issued and required.

EU REACH SVHC

REACH candidate substance (CAS No.)	Lead(CAS: 7439-92-1)
SCIP	b6820344-b092-42af-940b-c764b4ec8cc3

Phoenix Contact 2026 © - all rights reserved
https://www.phoenixcontact.com

Phoenix Contact USA
586 Fulling Mill Road
Middletown, PA 17057, United States
(+717) 944-1300
info@phoenixcon.com