PT 1X2+F-BE - Surge protection base-element

2856126

https://www.phoenixcontact.com/us/products/2856126

Please be informed that the data shown in this PDF document is generated from our online catalog. Please find the complete data in the user documentation. Our general terms of use for downloads are valid.



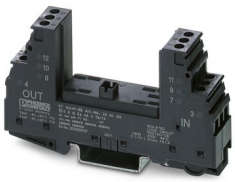

Base element for protective plug PT with protective circuit for a 2-core floating signal circuit. Integrated gas arrester as coarse protection between GND and PE. Mounting on NS 35/7.5 und NS 35/15, housing width: 17.5 mm.

Your advantages

- Maximum ease of maintenance, thanks to the 2-piece design
- Easy selection for all possible demands in MCR applications with a complete product portfolio
- The signal is not influenced during maintenance work, thanks to the impedance-neutral insertion and removal of protective plugs

ELEKTROGERÄTE RÜCKNAHME

Commercial data

Item number	2856126
Packing unit	10 pc
Minimum order quantity	1 pc
Sales key	CL21
Product key	CL2111
GTIN	4017918599270
Weight per piece (including packing)	55.2 g
Weight per piece (excluding packing)	46.381 g

Customs tariff number	85366990
Country of origin	DE

Technical data

Notes

Notes on operation	In the base elements PT...+F-BE, the connections 9/10 (GND) are linked to the mounting foot via a gas-filled surge arrester.

Product properties

Product type	Base element
Product family	PLUGTRAB PT
Type	Base element, DIN rail mounting
Number of positions	2
Surge protection fault message	none
Wire pairs per module	1

Insulation characteristics

Overvoltage category	III
Pollution degree	2

Electrical properties

Nominal voltage U_N	48 V DC

Connection data

Connection method	Screw connection
Screw thread	M3
Tightening torque	0.5 Nm
Conductor cross-section flexible	0.2 mm² ... 2.5 mm²
Conductor cross-section rigid	0.2 mm² ... 4 mm²
Conductor cross-section AWG	24 ... 12

Dimensions

Dimensional drawing	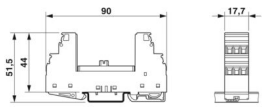
Width	17.7 mm
Height	90 mm
Depth	51.5 mm (incl. DIN rail 7.5 mm)
Horizontal pitch	1 HP

Material specifications

Color	black (RAL 9005)
	copper color
Flammability rating according to UL 94	V-0

Housing material	PA 6.6

Mechanical properties

Mechanical data

Open side panel	No

Protective circuit

Direction of action	Signal Ground/Shield-Earth Ground
Nominal voltage U_N	48 V DC
Maximum continuous operating voltage U_C	53 V DC
	37 V AC
Rated current	450 mA (45 °C)
Resistance per path	2.2 Ω ±10 %
Surge protection fault message	none
Max. required back-up fuse	500 mA (T)

Environmental and real-life conditions

Ambient conditions

Degree of protection	IP20
Ambient temperature (operation)	-40 °C ... 85 °C
Ambient temperature (storage/transport)	-40 °C ... 85 °C
Altitude	≤ 2000 m (amsl)

Approvals

Conformity/Approvals

ATEX	Ⓔx II 3 G Ex nA II T6/T4 X

Standards and regulations

Standards/specifications	IEC 61643-21
Note	2000 + corrigendum 2001 + A1:2008, modified + A2:2012
Standards/specifications	EN 61643-21
Note	2001 + A1:2009 + A2:2013
Standards/specifications	GB/T 3836.1
Note	2021
Standards/specifications	GB/T 3836.3
Note	2021

Mounting

Mounting type	DIN rail: 35 mm

Drawings

Dimensional drawing

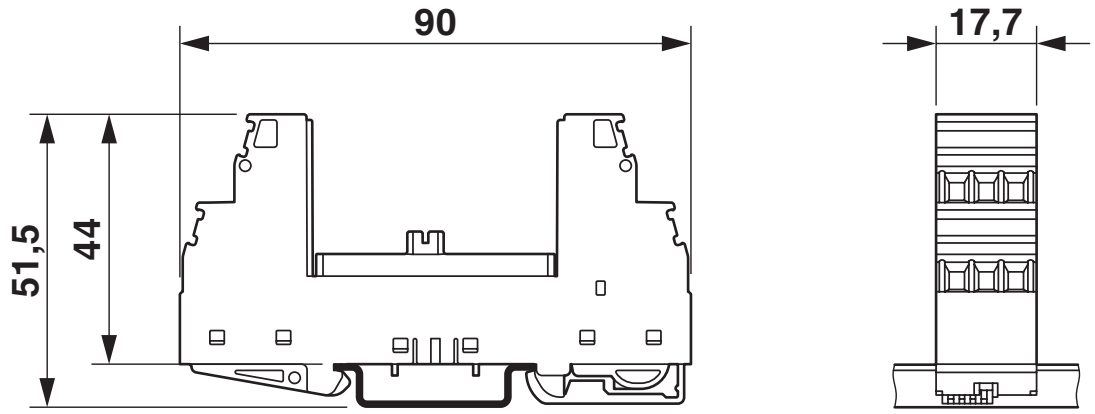

Diagram

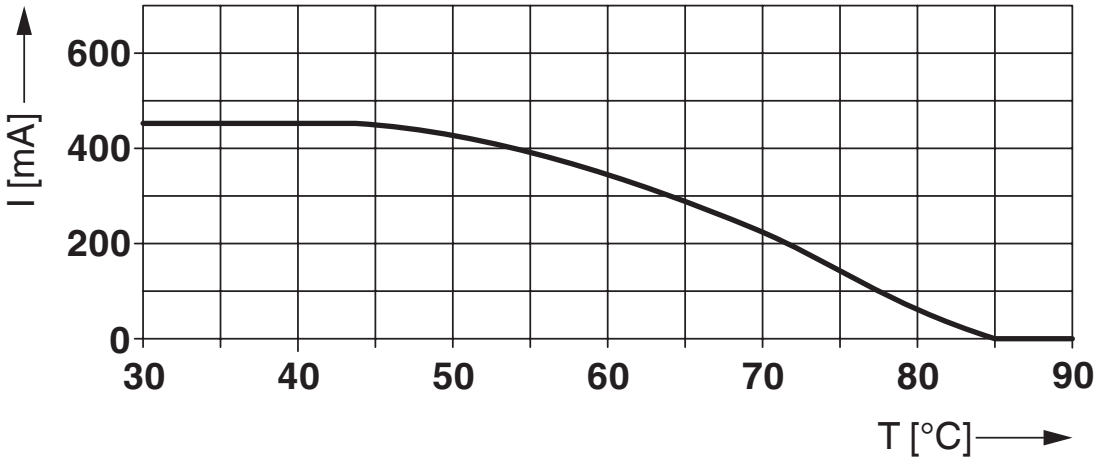

Circuit diagram

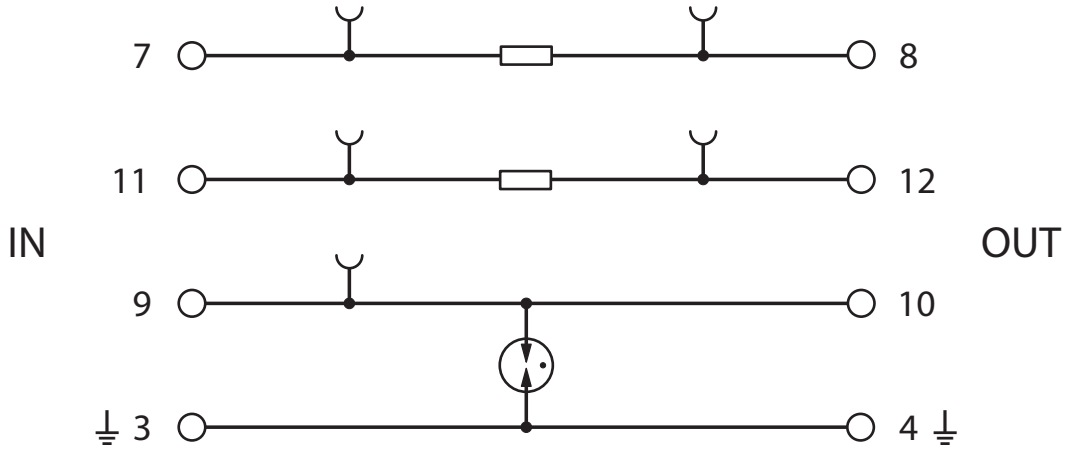

Approvals

To download certificates, visit the product detail page: https://www.phoenixcontact.com/us/products/2856126

DNV GL
Approval ID: TAE00001N6

UL Listed
Approval ID: FILE E 138168

CCC
Approval ID: 2020322316003150

cUL Listed
Approval ID: FILE E 333250

UL Listed
Approval ID: FILE E 333250

NEPSI-EX
Approval ID: GYJ20.1180X

ATEX
Approval ID: DEKRA 22ATEX0044X

IECEx
Approval ID: IECEx DEK 22.0031X

Classifications

ECLASS

ECLASS-13.0	27171592
ECLASS-15.0	27171592

ETIM

ETIM 10.0	EC002497

UNSPSC

UNSPSC 21.0	39121600

Environmental product compliance

EU RoHS

Fulfills EU RoHS substance requirements	Yes, No exemptions

China RoHS

Environment friendly use period (EFUP)	EFUP-E
	No hazardous substances above the limits

EU REACH SVHC

REACH candidate substance (CAS No.)	No substance above 0.1 wt%

Phoenix Contact 2026 © - all rights reserved
https://www.phoenixcontact.com

Phoenix Contact USA
586 Fulling Mill Road
Middletown, PA 17057, United States
(+717) 944-1300
info@phoenixcon.com