PT 4X1- 5DC-ST - Surge protection plug

2838306

https://www.phoenixcontact.com/us/products/2838306

Please be informed that the data shown in this PDF document is generated from our online catalog. Please find the complete data in the user documentation. Our general terms of use for downloads are valid.





Protective plug PT with protective circuit for 4 conductors of signal circuits grounded on one side.
Nominal voltage: 5 V DC

Your advantages

- Easy testing and documentation with CHECKMASTER 2 with pluggable protective modules
- Maximum ease of maintenance, thanks to the 2-piece design
- Easy selection for all possible demands in MCR applications with a complete product portfolio
- The signal is not influenced during maintenance work, thanks to the impedance-neutral insertion and removal of protective plugs

Commercial data

Item number	2838306
Packing unit	10 pc
Minimum order quantity	1 pc
Sales key	CL21
Product key	CL2111
GTIN	4017918182694
Weight per piece (including packing)	26.25 g
Weight per piece (excluding packing)	21.07 g
Customs tariff number	85363010
Country of origin	DE

Technical data

Product properties

Product type	Surge protection for MCR technology
Product family	PLUGTRAB PT
IEC test classification	C1
	C2
	C3
	D1
VDE requirement class	C1
	C2
	C3
	D1
Type	Male
Surge protection fault message	none
Arrester can be tested with CHECKMASTER from software version:	From SW rev. 1.00

Insulation characteristics

Overvoltage category	III
Pollution degree	2

Electrical properties

Nominal voltage U_N	5 V DC

Connection data

Connection method	Screw connection (in connection with the base element)
Screw thread	M3
Tightening torque	0.8 Nm
Conductor cross-section flexible	0.2 mm² ... 2.5 mm²
Conductor cross-section rigid	0.2 mm² ... 4 mm²
Conductor cross-section AWG	24 ... 12

Dimensions

Dimensional drawing	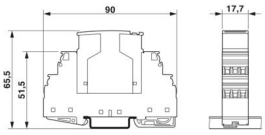
Width	17.7 mm
Height	45 mm
Depth	52 mm
Horizontal pitch	1 HP
Complete module width	17.7 mm

Complete module height	90 mm
Complete module depth	65.5 mm

Material specifications

Color	black (RAL 9005)
	copper color
Flammability rating according to UL 94	V-0
Housing material	PA 6.6

Mechanical properties

Mechanical data

Open side panel	No

Protective circuit

Direction of action	Line-Line & Line-Signal Ground/Shield & optional Signal Ground/Shield-Earth Ground
Nominal voltage U_N	5 V DC
Maximum continuous operating voltage U_C	6 V DC
	4 V AC
Rated current	300 mA (45 °C)
Operating effective current I_C at U_C	≤ 1 mA
Protective conductor current I_{PE}	≤ 1 µA (with PT 4X1+F-BE)
	≤ 4 mA (Directly grounded)
Nominal discharge current I_n (8/20) µs (line-ground)	10 kA
Pulse discharge current I_{imp} (10/350) µs	2.5 kA (per path)
Total discharge current I_{Total} (8/20) µs	20 kA
Max. discharge current I_{max} (8/20) µs maximum (line-earth)	10 kA
Nominal pulse current Ian (10/1000) µs (line-earth)	125 A
Output voltage limitation at 1 kV/µs (line-earth) spike	≤ 14 V
Output voltage limitation at 1 kV/µs (line-earth) static	≤ 10 V
Residual voltage at I_n (conductor-ground)	≤ 10 V
Voltage protection level U_p (line-earth)	≤ 50 V (C2 - 10 kV / 5 kA)
Response time t_A (line-earth)	≤ 1 ns
Input attenuation aE, asym.	0.5 dB (≤ 200 kHz)
Cut-off frequency fg (3 dB), asym. (PE) in 50 Ω system	typ. 1 MHz
Capacity (Core-Earth)	6 nF
Resistance per path	4.7 Ω
Surge protection fault message	none
Max. required back-up fuse	315 mA (T)
Impulse durability (line-earth)	C2 - 10 kV / 5 kA
	D1 - 2.5 kA

Environmental and real-life conditions

Ambient conditions

Degree of protection	IP20
Ambient temperature (operation)	-40 °C ... 85 °C

Standards and regulations

VDE requirement class	C1
	C2
	C3
	D1

Standards Information technology specification

Standards/regulations	IEC 61643-21
	IEC 61643-21

Air clearances and creepage distances

Standards/regulations	VDE 0110-1 / IEC 60664-1
Standards/specifications	IEC 61643-21
Note	2000

Mounting

Mounting type	on base element

Drawings

Dimensional drawing

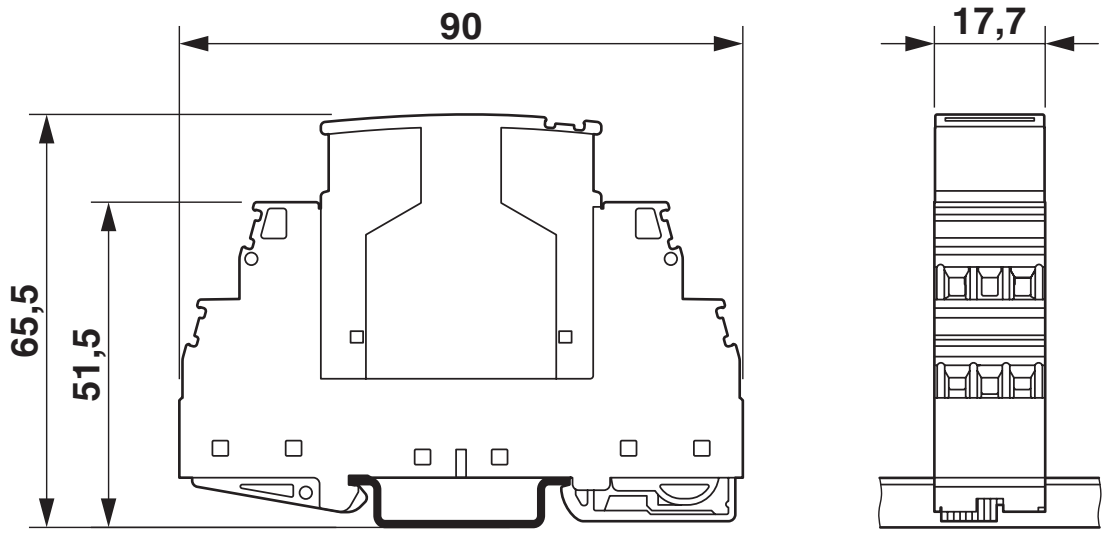

The figure shows the complete module consisting of a base element and connector

Circuit diagram

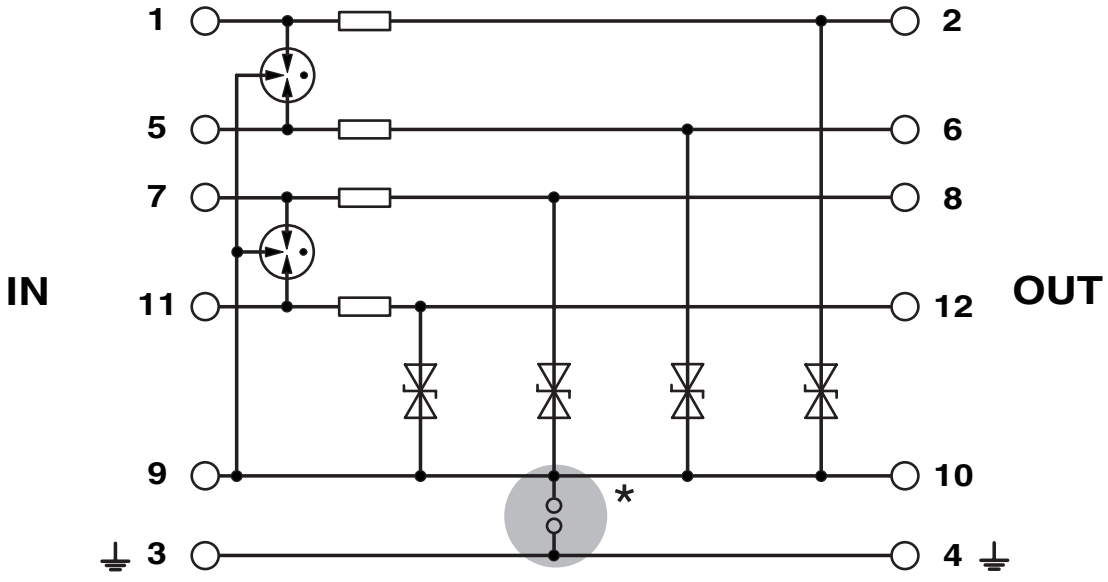

Approvals

To download certificates, visit the product detail page: https://www.phoenixcontact.com/us/products/2838306

UL Listed
Approval ID: FILE E 138168

	Nominal voltage U_N	Nominal current I_N	Cross section AWG	Cross section mm^2
keine				
	5 V	0.3 A	-	-

cUL Listed
Approval ID: FILE E 333250

UL Listed
Approval ID: FILE E 333250

Classifications

ECLASS

ECLASS-13.0	27171501
ECLASS-15.0	27171501

ETIM

ETIM 10.0	EC001466

UNSPSC

UNSPSC 21.0	39121600

Environmental product compliance

EU RoHS

Fulfills EU RoHS substance requirements	Yes
Exemption	7(a), 7(c)-I

China RoHS

Environment friendly use period (EFUP)	EFUP-50
	An article-related China RoHS declaration table can be found in the download area for the respective article under "Manufacturer declaration". For all articles with EFUP-E, no China RoHS declaration table issued and required.

EU REACH SVHC

REACH candidate substance (CAS No.)	Lead(CAS: 7439-92-1)
SCIP	ef6420dd-5dbe-4d7c-a320-38e8c69a6580

EF3.1 Climate Change

CO2e kg	1.106 kg CO2e

Phoenix Contact 2026 © - all rights reserved
https://www.phoenixcontact.com

Phoenix Contact USA
586 Fulling Mill Road
Middletown, PA 17057, United States
(+717) 944-1300
info@phoenixcon.com