MACX MCR-UI-UI-SP-NC - Input signal conditioner

2811556

https://www.phoenixcontact.com/us/products/2811556

Please be informed that the data shown in this PDF document is generated from our online catalog. Please find the complete data in the user documentation. Our general terms of use for downloads are valid.



Configurable 3-way isolating amplifier with safe electrical isolation, 24 V, power bridging. DIP switches on the front, over 1600 signal conversions can be set. Standard configuration (IN 0 ... 10 V/OUT 0 ... 20 mA), spring-cage connection, SIL.

Your advantages

- Power supply possible via DIN rail connector
- Over 1600 signal conversions can be set via DIP switches on the front
- Installation in zone 2 permitted
- Up to SIL 2 in accordance with EN 61508
- Active or passive output
- Status indicator for supply voltage
- Plug-in screw or spring-cage connection technology (Push-in technology)
- Analog signal conditioner for isolating, filtering, amplifying, and converting standard analog signals
- Configurable input and output signals, including bipolar current and voltage signals
- 3-way electrical isolation
- 10 kHz limit frequency for time-critical applications

Commercial data

Item number	2811556
Packing unit	1 pc
Minimum order quantity	1 pc
Sales key	C402
Product key	DK1111
GTIN	4046356467001
Weight per piece (including packing)	169.5 g
Weight per piece (excluding packing)	96 g
Customs tariff number	85437090
Country of origin	DE

Technical data

Product properties

Product type	Input signal conditioner
Product family	MACX Analog
No. of channels	1
Configuration	DIP switches

System properties

Functionality

Configuration	DIP switches

Electrical properties

Alignment span	± 4 %
Alignment zero	± 4 %
Electrical isolation between input and output	yes
Limit frequency (3 dB)	10 kHz (Can be switched to 30 Hz)
Protective circuit	Transient protection
Step response (10-90%)	35 µs (10 kHz)
	11 ms (30 Hz)
Maximum temperature coefficient	0.0075 %/K
Maximum transmission error	≤ 0.1 % (Compared to the final value)

Electrical isolation

Test voltage	2.5 kV AC (50 Hz, 60 s)
Overvoltage category	II
Pollution degree	2

Electrical isolation Input/output/power supply IEC/EN 61010-1

Standards/regulations	IEC/EN 61010-1
Rated insulation voltage	300 V_{rms}
Insulation	Safe isolation

Electrical isolation Input/output/power supply IEC/EN 60079-7

Standards/regulations	IEC/EN 60079-7
Rated insulation voltage	250 V AC/DC

Supply

Nominal supply voltage range	12 V DC ... 24 V DC -20 % ... +25 %
Supply voltage range	9.6 V DC ... 30 V DC
Power dissipation	500 mW (at 24 V DC / 20 mA)
Power consumption	≤ 700 mW

Input data

Signal: Voltage/current

Number of inputs	1
Voltage input signal	0 mV ... 50 mV
	0 mV ... 60 mV
	0 mV ... 75 mV
	0 mV ... 100 mV
	0 mV ... 120 mV
	0 mV ... 150 mV
	0 mV ... 200 mV
	0 mV ... 300 mV
	0 mV ... 500 mV
	0 V ... 1 V
	0 V ... 1.5 V
	0 V ... 2 V
	0 V ... 3 V
	0 V ... 5 V
	0 V ... 10 V (Configurable via DIP switches)
	0 V ... 15 V
	0 V ... 20 V
	0 V ... 30 V
	0 V ... 50 V
	0 V ... 100 V
	-50 mV ... 50 mV
	-60 mV ... 60 mV
	-75 mV ... 75 mV
	-100 mV ... 100 mV
	-120 mV ... 120 mV
	-150 mV ... 150 mV
	-200 mV ... 200 mV
	-300 mV ... 300 mV
	-500 mV ... 500 mV
	-1 V ... 1 V
	-1.5 V ... 1.5 V
	-2 V ... 2 V
	-3 V ... 3 V
	-5 V ... 5 V
	-10 V ... 10 V
	-15 V ... 15 V
	-20 V ... 20 V
	-30 V ... 30 V
	-50 V ... 50 V
	-100 V ... 100 V
	1 V ... 5 V

	2 V ... 10 V
Min. voltage input signal	± 50 mV
Max. voltage input signal	± 100 V
Current input signal	0 mA ... 1 mA (Configurable via DIP switches)
	0 mA ... 1.5 mA
	0 mA ... 2 mA
	0 mA ... 3 mA
	0 mA ... 5 mA
	0 mA ... 10 mA
	0 mA ... 15 mA
	0 mA ... 20 mA
	0 mA ... 30 mA
	0 mA ... 50 mA
	0 mA ... 100 mA
	-1 mA ... 1 mA
	-1.5 mA ... 1.5 mA
	-2 mA ... 2 mA
	-3 mA ... 3 mA
	-5 mA ... 5 mA
	-10 mA ... 10 mA
	-15 mA ... 15 mA
	-20 mA ... 20 mA
	-30 mA ... 30 mA
	-50 mA ... 50 mA
	-100 mA ... 100 mA
	1 mA ... 5 mA
	2 mA ... 10 mA
	4 mA ... 20 mA
Minimum current input signal	± 1 mA
Max. current input signal	± 100 mA
Input resistance of voltage input	approx. 1 MΩ (±1 V DC ... ±100 V DC)
Input resistance current input	approx. 10 Ω (±10 mA DC ... ±100 mA DC)

Output data

Signal: Voltage/current

Number of outputs	1
Configurable/programmable	Yes, can be switched
Voltage output signal	0 V ... 10 V (Configurable via DIP switches)
	0 V ... 5 V
	2 V ... 10 V
	1 V ... 5 V
	-10 V ... 10 V
	-5 V ... 5 V

	0 V ... 2.5 V
	0.5 V ... 2.5 V
	-2.5 V ... 2.5 V
Output signal voltage inverse	0 V ... 2.5 V
	0 V ... 5 V
	0 V ... 10 V
Current output signal	0 mA ... 5 mA
	0 mA ... 10 mA
	0 mA ... 20 mA (Configurable via DIP switches)
	1 mA ... 5 mA
	2 mA ... 10 mA
	4 mA ... 20 mA
	-5 mA ... 5 mA
	-10 mA ... 10 mA
	-20 mA ... 20 mA
Output signal current inverse	0 mA ... 5 mA
	0 mA ... 10 mA
	0 mA ... 20 mA
Load/output load voltage output	≥ 1 kΩ (10 V)
Load/output load current output	≤ 600 Ω (20 mA; active)
	passive: ≤ (UB-2 V) / I_{outmax}
Ripple	< 10 mV_{rms}

Connection data

Connection method	Push-in connection
Stripping length	10 mm
Conductor cross-section rigid	0.2 mm² ... 2.5 mm²
Conductor cross-section flexible	0.2 mm² ... 2.5 mm²
Conductor cross-section flexible (2 conductors with same cross section)	0.25 mm² ... 0.34 mm² (TWIN ferrule without plastic sleeve)
	0.5 mm² ... 1.5 mm² (TWIN ferrule with plastic sleeve)
Conductor cross-section AWG	24 ... 14
	24 ... 22 (TWIN ferrule without plastic sleeve)
	20 ... 16 (TWIN ferrule with plastic sleeve)

Ex data

Ex installation (EPL)	Gc
	Div. 2

Dimensions

Dimensional drawing	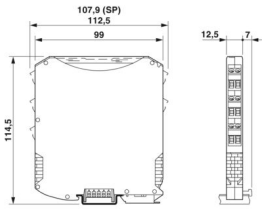
Width	12.5 mm
Height	107.9 mm
Depth	113.7 mm
Depth NS 35/7,5	114.5 mm (Snapped onto DIN rail NS 35/7,5 in accordance with EN 60715)

Material specifications

Color	gray (RAL 7042)
Housing material	PA 6.6-FR

Characteristics

Safety data: IEC 61508 - High demand

Safety Integrity Level (SIL)	2

Safety data: IEC 61508 - High demand

Safety Integrity Level (SIL)	2

Safety data: IEC 61508 - Low demand

Safety Integrity Level (SIL)	2

Safety data: IEC 61508 - Low demand

Safety Integrity Level (SIL)	2

Environmental and real-life conditions

Ambient conditions

Degree of protection	IP20 (not assessed by UL)
Ambient temperature (operation)	-20 °C ... 70 °C
Ambient temperature (storage/transport)	-40 °C ... 85 °C

Altitude range (≤ 2000 m)

Altitude	≤ 2000 m (The technical data refers to altitudes ≤2000 m above mean sea level. For altitudes >2000 m above mean sea level, refer to the data sheet.)
Ambient temperature (operation)	-20 °C ... 70 °C

Altitude range (≤ 3000 m)

Height range	> 2000 m ... 3000 m
Ambient temperature (operation)	-20 °C ... 60 °C
Rated insulation voltage	190 V

Altitude range (≤ 4000 m)

Height range	> 3000 m ... 4000 m
Ambient temperature (operation)	-20 °C ... 55 °C
Rated insulation voltage	63 V

Altitude range (≤ 5000 m)

Height range	> 4000 m ... 5000 m
Ambient temperature (operation)	-20 °C ... 45 °C
Rated insulation voltage	63 V

Approvals

CE

Certificate	CE-compliant

ATEX

Identification	Ⓔx II 3 G Ex ec IIC T4 Gc
Certificate	BVS 10 ATEX E 059 X

UKCA Ex (UKEX)

Identification	Ⓔx II 3 G Ex nA IIC T4 Gc
Certificate	PxCIF21UKEX2811284X

IECEx

Identification	Ex ec IIC T4 Gc
Certificate	IECEx BVS 10.0044X

CCC / China-Ex

Identification	Ex ec IIC T4 Gc
Certificate	2021122304114077

UL, USA/Canada

Identification	UL 61010 Listed
	Class I, Div. 2, Groups A, B, C, D T6
	Class I, Zone 2, Group IIC

Shipbuilding approval

Certificate	DNV GL TAA000020C

Safety Integrity Level (SIL, IEC 61508)

Identification	2

INMETRO

Identification	Ex ec IIC T4 Gc
Certificate	DNV 21.0063 X

Shipbuilding data

Temperature	B
Humidity	B

Vibration	A
EMC	A
Enclosure	Required protection according to the Rules shall be provided upon installation on board

EMC data

Electromagnetic compatibility	Conformance with EMC directive
Noise immunity	EN 61000-6-2
Note	When being exposed to interference, there may be minimal deviations.

Noise emission

Standards/regulations	EN 61000-6-4

Electromagnetic HF field

Designation	Electromagnetic RF field
Standards/regulations	EN 61000-4-3
Typical deviation from the upper range value	1 %

Fast transients (burst)

Designation	Fast transients (burst)
Standards/regulations	EN 61000-4-4
Typical deviation from the upper range value	1 %

Conducted interference

Designation	Conducted interferences
Standards/regulations	EN 61000-4-6
Typical deviation from the upper range value	1 %

Standards and regulations

GB Standard

Standards/regulations	GB/T 3836.1
	GB/T 3836.3

Mounting

Mounting type	DIN rail mounting
Mounting position	any

Drawings

Dimensional drawing

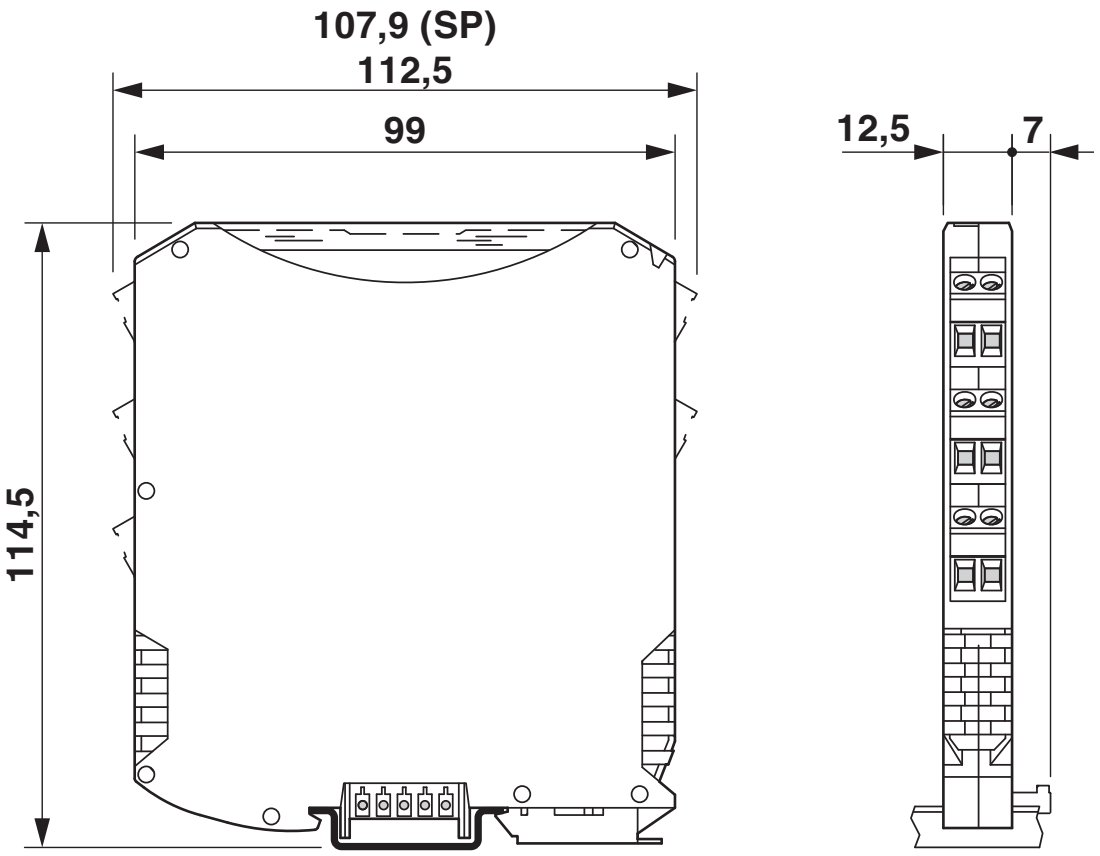

Block diagram

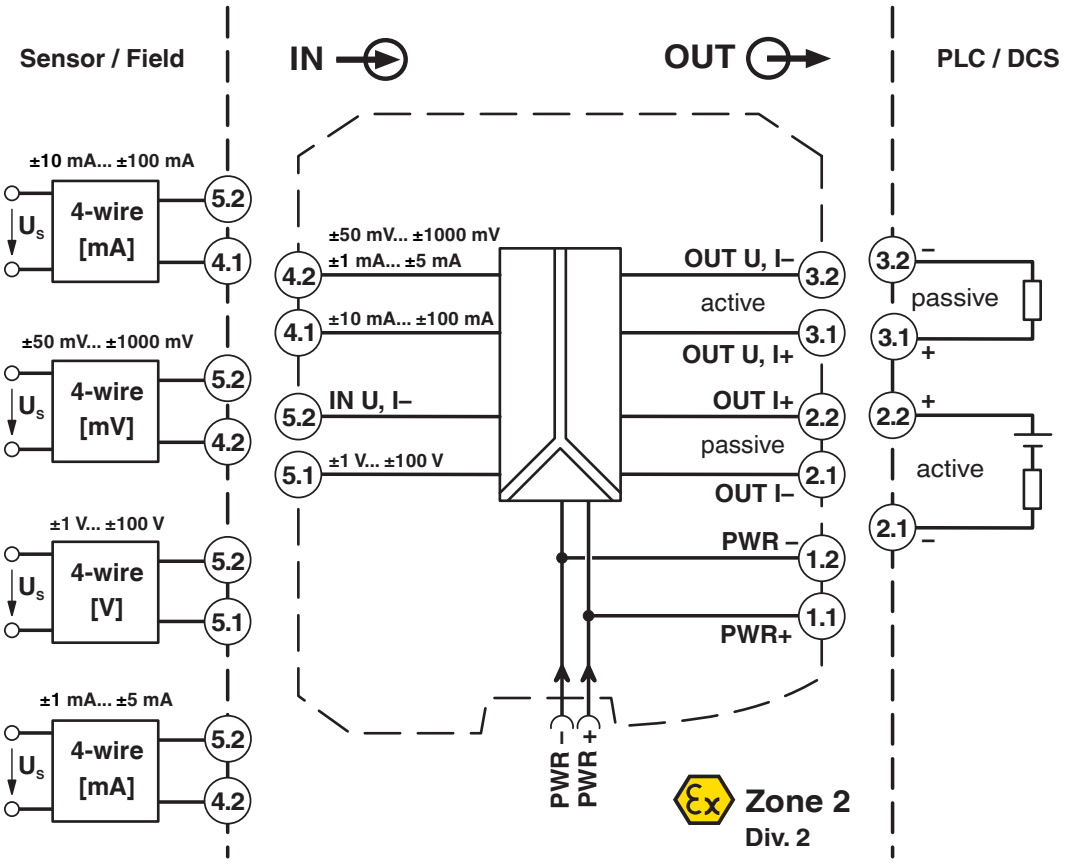

Approvals

To download certificates, visit the product detail page: https://www.phoenixcontact.com/us/products/2811556

DNV
Approval ID: TAA000020C

UL Listed
Approval ID: E330267

cUL Listed
Approval ID: E330267

Functional Safety
Approval ID: BVS Pb 01/10

EAC Ex
Approval ID: BY/112 02.01 TP012xx

IECEx
Approval ID: IECEx BVS 10.0044X

CCC
Approval ID: 2021122304114077

cUL Listed
Approval ID: E199827

UL Listed
Approval ID: FILE E 199827

ATEX
Approval ID: BVS 10 ATEX E059 X

INMETRO
Approval ID: DNV 21.0063X

Classifications

ECLASS

ECLASS-13.0	27210120
ECLASS-15.0	27210120

ETIM

ETIM 10.0	EC002653

UNSPSC

UNSPSC 21.0	39121000

Environmental product compliance

EU RoHS

Fulfills EU RoHS substance requirements	Yes
Exemption	6(c), 7(a), 7(c)-I

China RoHS

Environment friendly use period (EFUP)	EFUP-50
	An article-related China RoHS declaration table can be found in the download area for the respective article under "Manufacturer declaration". For all articles with EFUP-E, no China RoHS declaration table issued and required.

EU REACH SVHC

REACH candidate substance (CAS No.)	Lead(CAS: 7439-92-1)
	2,2',6,6'-tetrabromo-4,4'-isopropylidenediphenol(CAS: 79-94-7)
SCIP	f1e356a7-b545-4fc6-86cd-e1493676de02

EF3.1 Climate Change

CO2e kg	5.78 kg CO2e

Phoenix Contact 2026 © - all rights reserved
https://www.phoenixcontact.com

Phoenix Contact USA
586 Fulling Mill Road
Middletown, PA 17057, United States
(+717) 944-1300
info@phoenixcon.com