MINI MCR-SL-TB - Feed-through terminal block

2811420

https://www.phoenixcontact.com/us/products/2811420

Please be informed that the data shown in this PDF document is generated from our online catalog. Please find the complete data in the user documentation. Our general terms of use for downloads are valid.



Feed-through terminal block for transmission of signals that are already electrically isolated

Product description

The 6.2 mm narrow MINI MCR-SL-TB is a feed-through terminal block for the transmission of signals that are already electrically isolated.

Your advantages

- Feed-through terminal block for 1:1 forwarding of signals in the MINI Analog group
- Use in conjunction with the MINI Analog multiplexer
- For direct mounting in applications without signal conversion and without electrical isolation

Commercial data

Item number	2811420
Packing unit	1 pc
Minimum order quantity	1 pc
Sales key	C403
Product key	DK113Z
GTIN	4046356281911
Weight per piece (including packing)	75.4 g
Weight per piece (excluding packing)	59.9 g
Customs tariff number	85389091
Country of origin	DE

Technical data

Product properties

Product type	Feed-through terminal block
Product family	MINI Analog
No. of channels	1

Electrical properties

Current carrying capacity	1 A
Contact resistance	< 10 mΩ

Input data

Signal: Voltage/current

Max. voltage input signal	30 V AC/DC
Max. current input signal	1 A

Connection data

Connection method	Screw connection
Stripping length	12 mm
Screw thread	M3
Number of connections	1
Conductor cross-section rigid	0.2 mm² ... 2.5 mm²
Conductor cross-section flexible	0.2 mm² ... 2.5 mm²
Conductor cross-section AWG	24 ... 12

Dimensions

Dimensional drawing	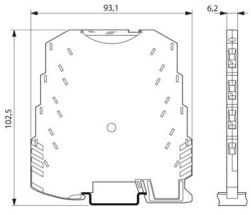
Width	6.2 mm
Height	93.1 mm
Depth	101.2 mm

Material specifications

Color	green (RAL 6021)
Housing material	PBT
Fire protection for rail vehicles (DIN EN 45545-2) R22	HL 1 - HL 2
Fire protection for rail vehicles (DIN EN 45545-2) R23	HL 1 - HL 2
Fire protection for rail vehicles (DIN EN 45545-2) R24	HL 1 - HL 2

Environmental and real-life conditions

Ambient conditions

Degree of protection	IP20
Ambient temperature (operation)	-20 °C ... 65 °C
Ambient temperature (storage/transport)	-40 °C ... 85 °C
Altitude	≤ 2000 m
Permissible humidity (operation)	5 % ... 95 % (non-condensing)

Approvals

CE

Certificate	CE-compliant

UKCA

Certificate	UKCA-compliant

Shipbuilding approval

Certificate	DNV GL TAA000020N

Shipbuilding data

Temperature	B
Humidity	B
Vibration	B
EMC	A
Enclosure	Required protection according to the Rules shall be provided upon installation on board

EMC data

Electromagnetic compatibility	Conformance with EMC directive
Noise immunity	EN 61000-6-2
Note	When being exposed to interference, there may be minimal deviations.

Noise emission

Standards/regulations	EN 61000-6-4

Electrostatic discharge

Standards/regulations	EN 61000-4-2

Electrostatic discharge

Comments	Safety measures must be taken to prevent electrostatic discharge.

Electromagnetic HF field

Designation	Electromagnetic RF field
Standards/regulations	EN 61000-4-3
Evaluation criterion	A

Fast transients (burst)

Designation	Fast transients (burst)
Standards/regulations	EN 61000-4-4
Evaluation criterion	B

Surge current load (surge)

Standards/regulations	EN 61000-4-5

Surge current load (surge)

Comments	Criterion B

Conducted interference

Designation	Conducted interferences
Standards/regulations	EN 61000-4-6
Evaluation criterion	A

Mounting

Mounting type	NS 35/7,5 NS 35/15 NS 35/15-2,3 DIN rail mounting
Assembly note	The DIN rail connector can be used for bridging the supply voltage. It can be snapped onto a 35 mm EN 60715 DIN rail.
Mounting position	any

Drawings

Dimensional drawing

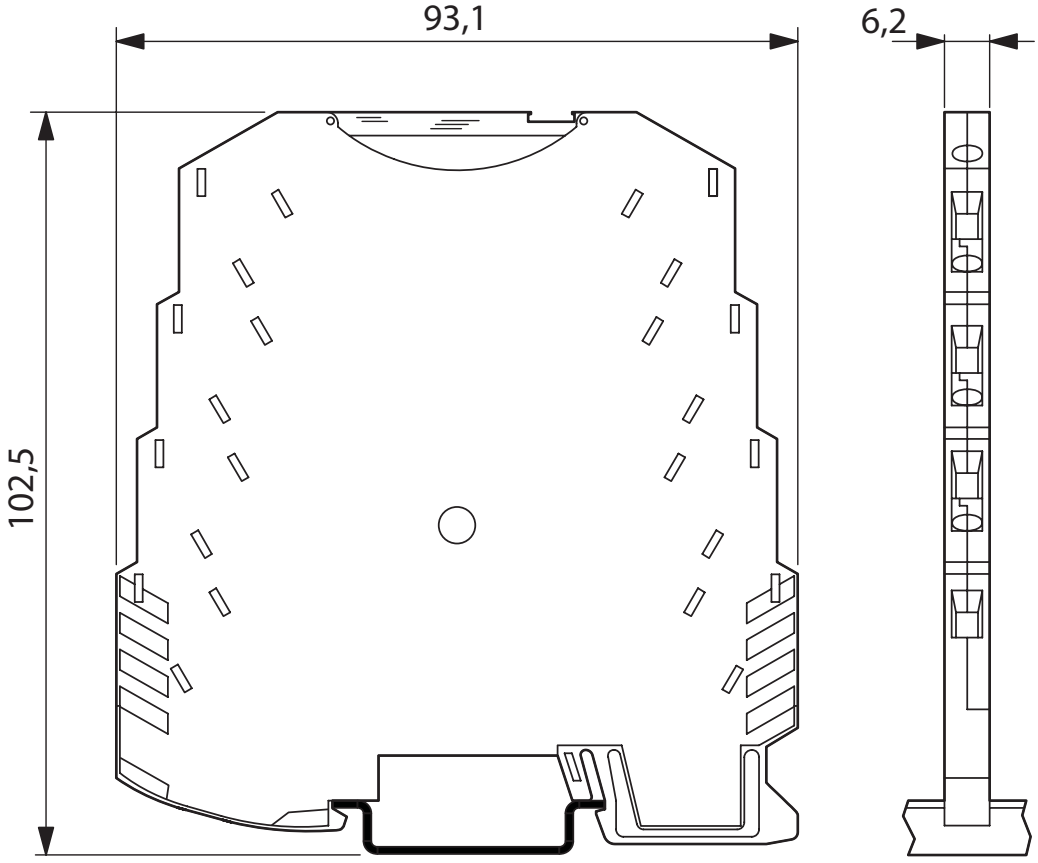

Block diagram

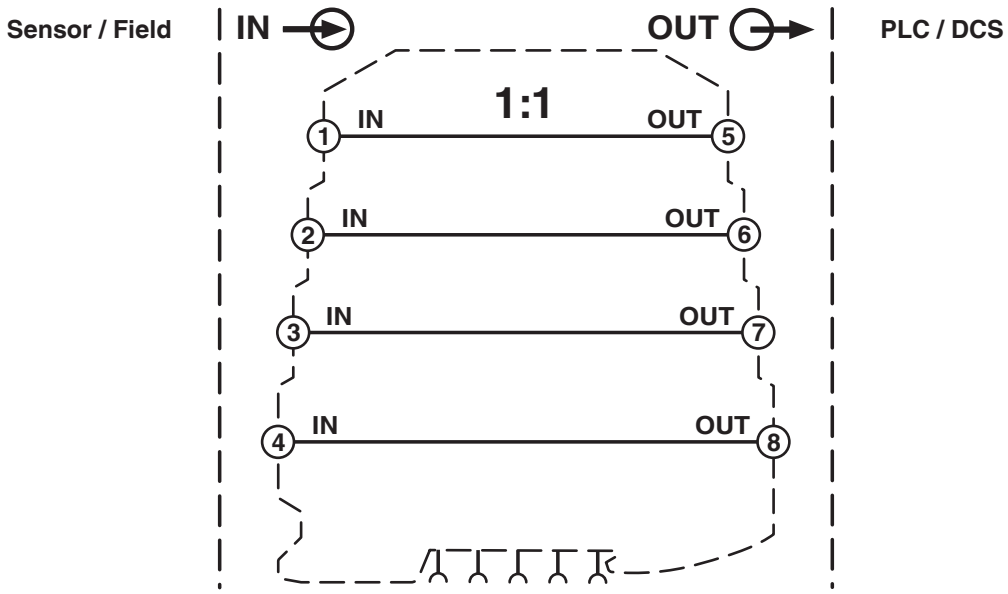

Classifications

ECLASS

ECLASS-13.0	27210192
ECLASS-15.0	27210192

ETIM

ETIM 10.0	EC002498

UNSPSC

UNSPSC 21.0	39121000

Environmental product compliance

EU RoHS

Fulfills EU RoHS substance requirements	Yes, No exemptions

China RoHS

Environment friendly use period (EFUP)	EFUP-E
	No hazardous substances above the limits

EU REACH SVHC

REACH candidate substance (CAS No.)	No substance above 0.1 wt%

Phoenix Contact 2026 © - all rights reserved
https://www.phoenixcontact.com

Phoenix Contact USA
586 Fulling Mill Road
Middletown, PA 17057, United States
(+717) 944-1300
info@phoenixcon.com