MINI MCR-SL-SHUNT-UI-NC - Input signal conditioner

2810780

https://www.phoenixcontact.com/us/products/2810780

Please be informed that the data shown in this PDF document is generated from our online catalog. Please find the complete data in the user documentation. Our general terms of use for downloads are valid.



MCR 3-way signal conditioner, with configurable input/output, for electrical isolation and conversion of analog signals in the mV range, both unipolar and bipolar with screw connection, not preconfigured

Your advantages

- Power supply possible via the foot element (TBUS)
- Ideal for converting signals for shunt measurements
- Low power consumption
- Highly-compact isolating amplifier for electrical isolation, conversion, amplification, and filtering of mV signals to create standard analog signals
- Up to 280 signal combinations can be configured using DIP switches
- 3-way isolation

Commercial data

Item number	2810780
Packing unit	1 pc
Minimum order quantity	1 pc
Sales key	C403
Product key	DK1131
GTIN	4046356305341
Weight per piece (including packing)	61.9 g
Weight per piece (excluding packing)	117.7 g
Customs tariff number	85437090
Country of origin	DE

Technical data

Notes

Utilization restriction

EMC note	EMC: class A product, see manufacturer's declaration in the download area

Product properties

Product type	Input signal conditioner
Product family	MINI Analog
No. of channels	1
Configuration	DIP switches

System properties

Functionality

Configuration	DIP switches

Electrical properties

Electrical isolation	3-way isolation
Electrical isolation between input and output	yes
Limit frequency (3 dB)	100 Hz / 30 Hz switchable
Step response (10-90%)	3.5 ms (100 Hz)
Maximum temperature coefficient	< 0.01 %/K
Temperature coefficient, typical	< 0.002 %/K
Maximum transmission error	≤ 0.2 %
	< 0.4 % (Without adjustment)

Electrical isolation

Overvoltage category	II
Pollution degree	2

Electrical isolation Input/output/power supply IEC/EN 61010

Standards/regulations	IEC/EN 61010
Rated insulation voltage	30 V AC
	50 V DC
Test voltage	1.5 kV AC (50 Hz, 60 s)
Insulation	Basic insulation

Supply

Nominal supply voltage	24 V DC
Supply voltage range	19.2 V DC ... 30 V DC (The DIN rail connector (ME 6,2 TBUS-2 1,5/5-ST-3,81 GN, item no. 2869728) can be used to bridge the supply voltage. It can be snapped onto a 35 mm DIN rail in accordance with EN 60715)
Max. current consumption	< 25 mA

Power consumption	< 450 mW (Current output)

Input data

Signal: Voltage

Number of inputs	1
Configurable/programmable	Yes, unconfigured
Voltage input signal	-50 mV ... 50 mV
	-60 mV ... 60 mV
	-75 mV ... 75 mV
	-80 mV ... 80 mV
	-100 mV ... 100 mV
	-120 mV ... 120 mV
	-150 mV ... 150 mV
	-200 mV ... 200 mV
	-240 mV ... 240 mV
	-300 mV ... 300 mV
	-500 mV ... 500 mV
	-600 mV ... 600 mV
	-750 mV ... 750 mV
	-800 mV ... 800 mV
	-1 V ... 1 V
	-1.2 V ... 1.2 V
	-1.5 V ... 1.5 V
	-2 V ... 2 V
	-2.4 V ... 2.4 V
	-3 V ... 3 V
	0 mV ... 50 mV (additional areas can be configured, see table)
	0 mV ... 60 mV
	0 mV ... 75 mV
	0 mV ... 80 mV
	0 mV ... 100 mV
	0 mV ... 120 mV
	0 mV ... 150 mV
	0 mV ... 200 mV
	0 mV ... 240 mV
	0 mV ... 300 mV
	0 mV ... 500 mV
	0 mV ... 600 mV
	0 mV ... 750 mV
	0 mV ... 800 mV
	0 V ... 1 V
	0 V ... 1.2 V
	0 V ... 1.5 V

	0 V ... 2 V
	0 V ... 2.4 V
	0 V ... 3 V
Max. voltage input signal	approx. 3 V DC
Input resistance of voltage input	approx. 10 kΩ

Output data

Signal: Voltage/current

Number of outputs	1
Configurable/programmable	Yes, unconfigured
Voltage output signal	0 V ... 10 V
	2 V ... 10 V
	0 V ... 5 V
	1 V ... 5 V
	-10 V ... 10 V (The bi-polar output can be used only for bi-polar input signals.)
	-5 V ... 5 V (The bi-polar output can be used only for bi-polar input signals.)
Current output signal	0 mA ... 20 mA
	4 mA ... 20 mA
Load/output load voltage output	≥ 10 kΩ
Load/output load current output	< 500 Ω (at 20 mA)
Ripple	< 20 mV_{PP} (at 500 Ω)
	< 20 mV_{PP} (at 10 kΩ)

Connection data

Connection method	Screw connection
Connection technology	2-conductor
Stripping length	12 mm
Screw thread	M3
Conductor cross-section rigid	0.2 mm² ... 2.5 mm²
Conductor cross-section flexible	0.2 mm² ... 2.5 mm²
Conductor cross-section AWG	26 ... 12

Dimensions

Dimensional drawing	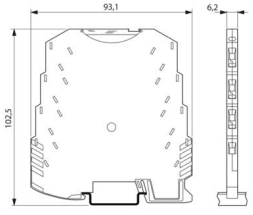
Width	6.2 mm
Height	93.1 mm
Depth	102.5 mm

Material specifications

Color	green (RAL 6021)
Housing material	PBT
Fire protection for rail vehicles (DIN EN 45545-2) R22	HL 1 - HL 2
Fire protection for rail vehicles (DIN EN 45545-2) R23	HL 1 - HL 2
Fire protection for rail vehicles (DIN EN 45545-2) R24	HL 1 - HL 2

Environmental and real-life conditions

Ambient conditions

Degree of protection	IP20
Ambient temperature (operation)	-20 °C ... 65 °C
Ambient temperature (storage/transport)	-40 °C ... 85 °C
Altitude	≤ 2000 m
Permissible humidity (operation)	5 % ... 95 % (non-condensing)

Approvals

CE

Certificate	CE-compliant

UL, USA/Canada

Identification	UL 508 Recognized
	Class I, Div. 2, Groups A, B, C, D T4

EMC data

Electromagnetic compatibility	Conformance with EMC directive
Noise immunity	EN 61000-6-2
Note	When being exposed to interference, there may be minimal deviations.

Noise emission

Standards/regulations	EN 61000-6-4

Electrostatic discharge

Standards/regulations	EN 61000-4-2

Electrostatic discharge

Comments	Safety measures must be taken to prevent electrostatic discharge.

Electromagnetic HF field

Designation	Electromagnetic RF field
Standards/regulations	EN 61000-4-3
Typical deviation from the upper range value	6 %

Fast transients (burst)

Designation	Fast transients (burst)

Standards/regulations	EN 61000-4-4
Typical deviation from the upper range value	6 %

Surge current load (surge)

Standards/regulations	EN 61000-4-5

Surge current load (surge)

Comments	Criterion B

Conducted interference

Designation	Conducted interferences
Standards/regulations	EN 61000-4-6
Typical deviation from the upper range value	6 %

Standards and regulations

Electrical isolation	3-way isolation

Mounting

Mounting type	DIN rail mounting
Assembly note	The DIN rail connector can be used for bridging the supply voltage. It can be snapped onto a 35 mm EN 60715 DIN rail.
Mounting position	any

Drawings

Dimensional drawing

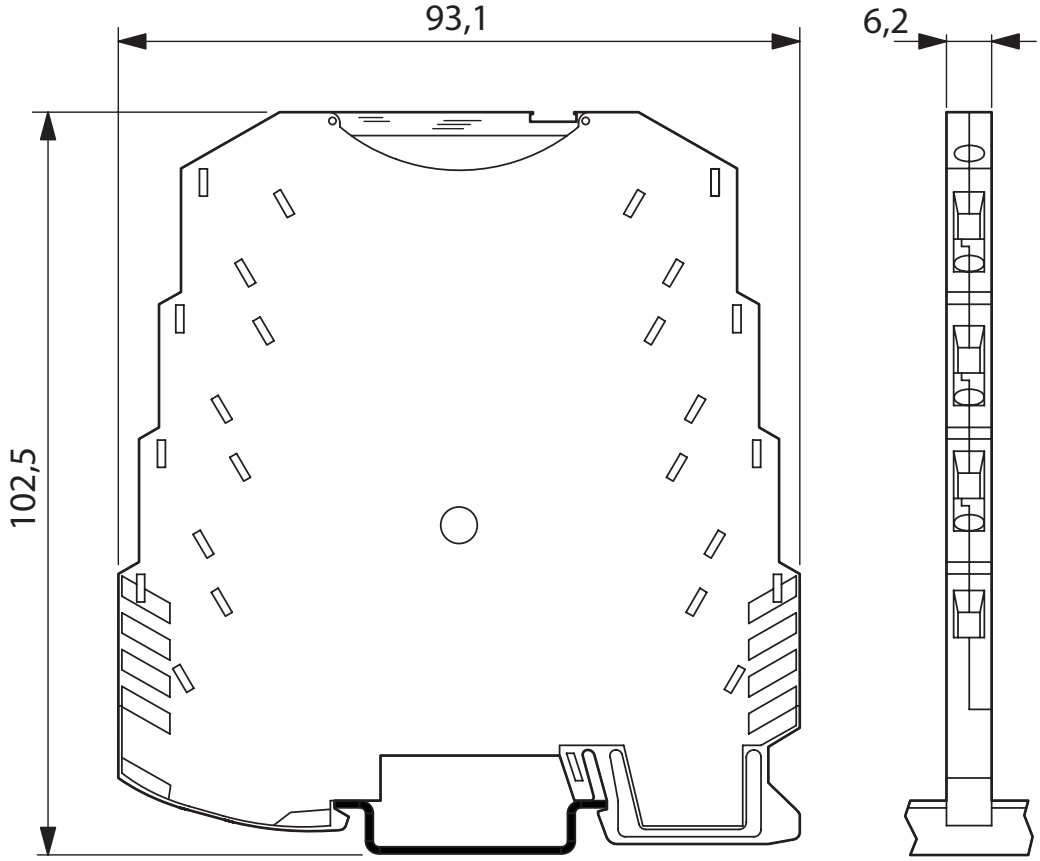

Application drawing

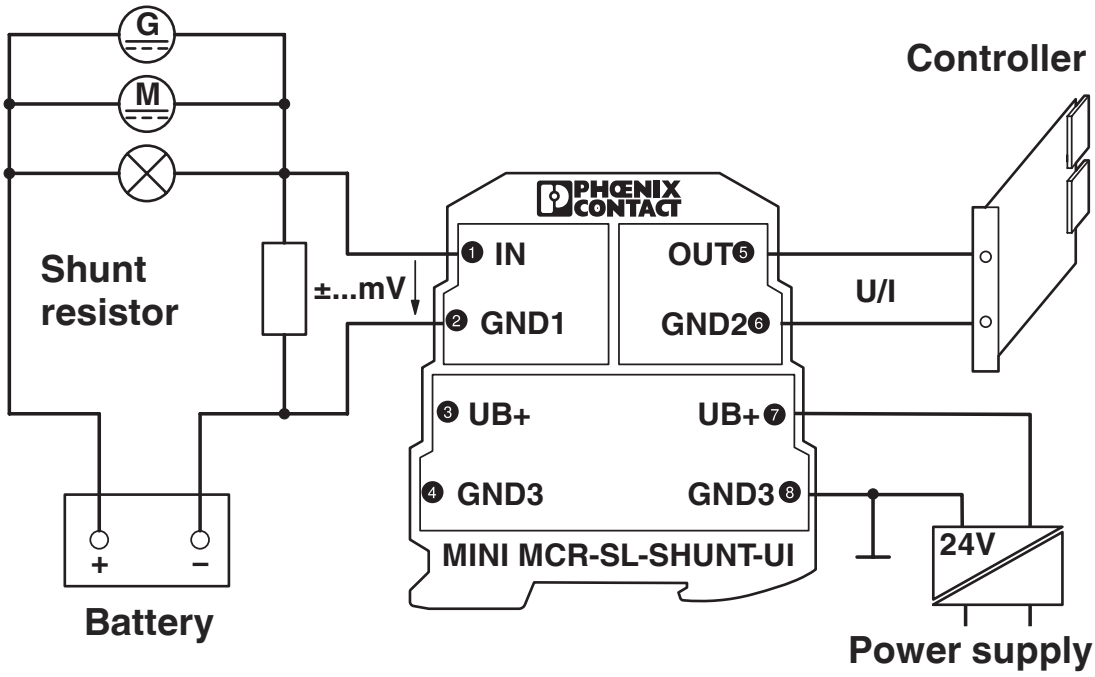

Monitoring of loading and unloading currents

Block diagram

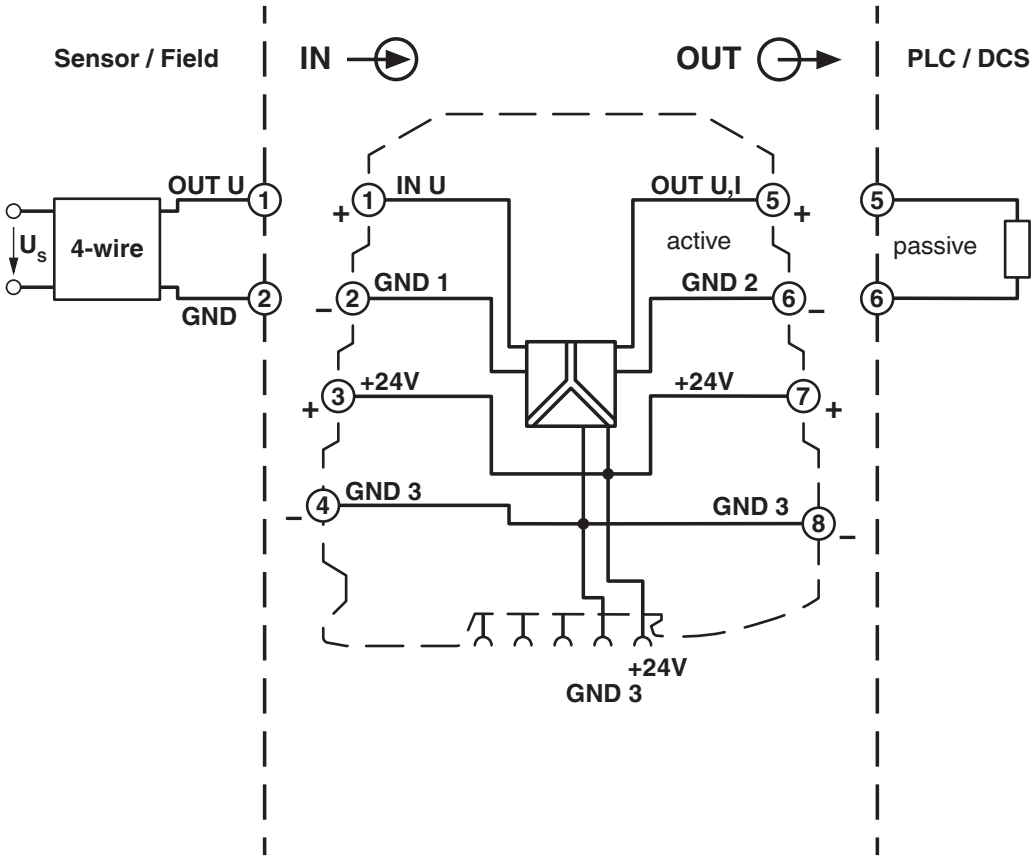

Approvals

To download certificates, visit the product detail page: https://www.phoenixcontact.com/us/products/2810780

cUL Recognized
Approval ID: E238705

UL Recognized
Approval ID: E238705

cUL Listed
Approval ID: E199827

UL Listed
Approval ID: E199827

Classifications

ECLASS

ECLASS-13.0	27210120
ECLASS-15.0	27210120

ETIM

ETIM 10.0	EC002653

UNSPSC

UNSPSC 21.0	39121000

Environmental product compliance

EU RoHS

Fulfills EU RoHS substance requirements	Yes
Exemption	6(c), 7(a), 7(c)-I

China RoHS

Environment friendly use period (EFUP)	EFUP-50
	An article-related China RoHS declaration table can be found in the download area for the respective article under "Manufacturer declaration". For all articles with EFUP-E, no China RoHS declaration table issued and required.

EU REACH SVHC

REACH candidate substance (CAS No.)	Lead(CAS: 7439-92-1)
SCIP	7975b2f4-38e1-460a-af8d-0a3645e9af5f

Phoenix Contact 2026 © - all rights reserved
https://www.phoenixcontact.com

Phoenix Contact USA
586 Fulling Mill Road
Middletown, PA 17057, United States
(+717) 944-1300
info@phoenixcon.com