DT-TELE-SHDSL - Surge protection device

2801593

https://www.phoenixcontact.com/us/products/2801593

Please be informed that the data shown in this PDF document is generated from our online catalog. Please find the complete data in the user documentation. Our general terms of use for downloads are valid.





Attachment plug with surge protection for two SHDSL telecommunications interfaces (ports). Connection: RJ45 (RJ12/RJ11) and plug-in screw terminal block (COMBICON). Alternatively, can be snapped onto a DIN rail.

Commercial data

Item number	2801593
Packing unit	1 pc
Minimum order quantity	1 pc
Sales key	CL03
Product key	CL3221
GTIN	4046356868457
Weight per piece (including packing)	323 g
Weight per piece (excluding packing)	320 g
Customs tariff number	85363010
Country of origin	DE

Technical data

Product properties

Product type	Surge protection for information technology
Product family	DATATRAB
IEC test classification	B2
	C1
	C2
	C3
	D1
VDE requirement class	B2
	C1
	C2
	C3
	D1
Type	Attachment plug for DIN rail mounting
Number of positions	4
Wire pairs per module	2

Connection data

Connection method	RJ45 / COMBICON
Screw thread	M2
Tightening torque	0.22 Nm
Conductor cross-section flexible	0.14 mm² ... 1.5 mm²
Conductor cross-section rigid	0.14 mm² ... 1.5 mm²
Conductor cross-section AWG	28 ... 16

Dimensions

Dimensional drawing	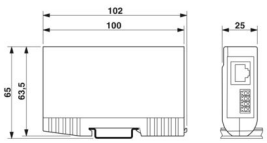
Width	25 mm
Height	103 mm
Depth	63 mm

Material specifications

Color	silver-colored
	black (RAL 9005)
Housing material	Die-cast zinc

Mechanical properties

Mechanical data

Open side panel	No

Protective circuit

Direction of action	Line-Line & Line-Ground/Shield
Maximum continuous operating voltage U_C	185 V DC
	130 V AC
Rated current	≤ 380 mA (25 °C)
Operating effective current I_C at U_C	≤ 6 µA
Protective conductor current I_{PE}	≤ 4 µA
Nominal discharge current I_n (8/20) µs (line-line)	≤ 5 kA
Nominal discharge current I_n (8/20) µs (line-ground)	≤ 5 kA
Pulse discharge current I_{imp} (10/350) µs	2.5 kA (Number of pulses category D1)
Total discharge current I_{Total} (8/20) µs	10 kA
Nominal pulse current Ian (10/1000) µs (line-line)	100 A
Nominal pulse current Ian (10/1000) µs (line-earth)	100 A
Nominal pulse current Ian (10/700) µs (line-line)	150 A
Nominal pulse current Ian (10/700) µs (line-earth)	150 A
Voltage protection level U_p (line-line)	250 V (B2 - 100 A)
	≤ 250 V (C1 - 500 A)
	≤ 410 V (C2 - 5 kA)
	≤ 250 V (C3 - 100 A)
Voltage protection level U_p (line-earth)	≤ 580 V (B2 - 100 A)
	≤ 580 V (C1 - 500 A)
	≤ 790 V (C2 - 5 kA)
	≤ 300 V (C3 - 100 A)
Response time t_A (line-line)	≤ 100 ns
Response time t_A (line-earth)	≤ 100 ns
Input attenuation aE, sym.	typ. 0.3 dB (≤ 2.8 MHz / 100 Ω)
	typ. 3 dB (≤ 25 MHz / 100 Ω)
Cut-off frequency fg (3 dB), sym. in 100 Ω system	25 MHz
Capacity (Core-Core)	55 pF
Capacity (Core-Earth)	7 pF
Resistance per path	3.3 Ω 20 %
Surge protection fault message	none
Impulse durability (line-line)	C1 - 1 kV / 500 A
	C2 - 10 kV / 5 kA
	B2 - 4 kV / 100 A
Impulse durability (line-earth)	B2 - 4 kV / 100 A
	C1 - 1 kV / 500 A
	C2 - 10 kV / 5 kA
	D1 - 1 kA

Environmental and real-life conditions

Ambient conditions

Degree of protection	IP20
Ambient temperature (operation)	-40 °C ... 85 °C
Ambient temperature (storage/transport)	-40 °C ... 85 °C

Standards and regulations

VDE requirement class	B2
	C1
	C2
	C3
	D1

Standards Information technology specification

Standards/regulations	IEC 61643-21
	IEC 61643-21

Air clearances and creepage distances

Standards/regulations	IEC 60664-1 / VDE 0110-1
Standards/specifications	IEC 61643-21
Note	2002

Mounting

Mounting type	Connection-specific attachment plug and DIN rail, 35 mm

Drawings

Dimensional drawing

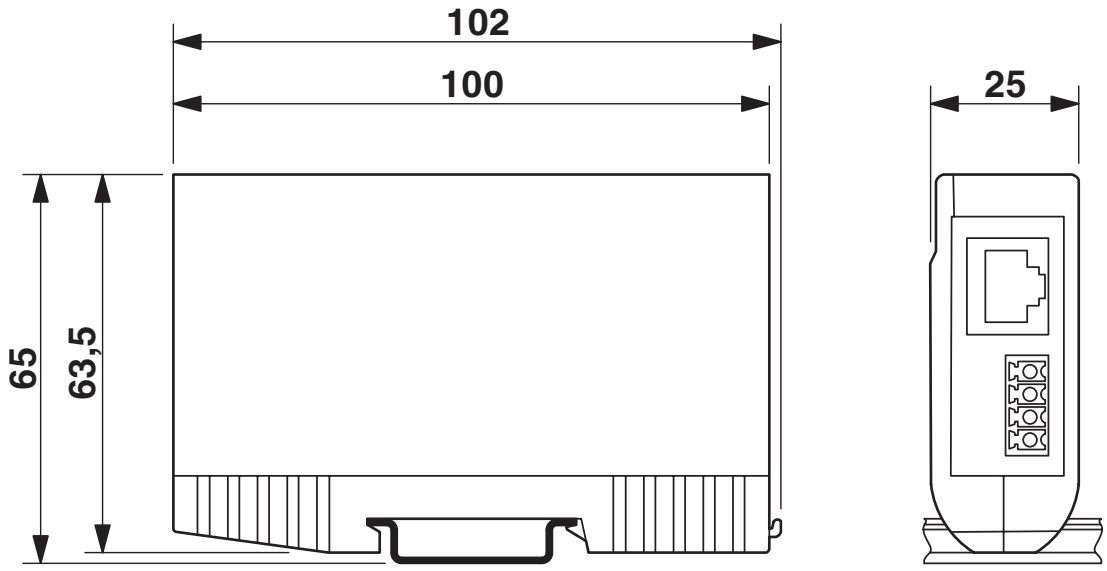

Circuit diagram

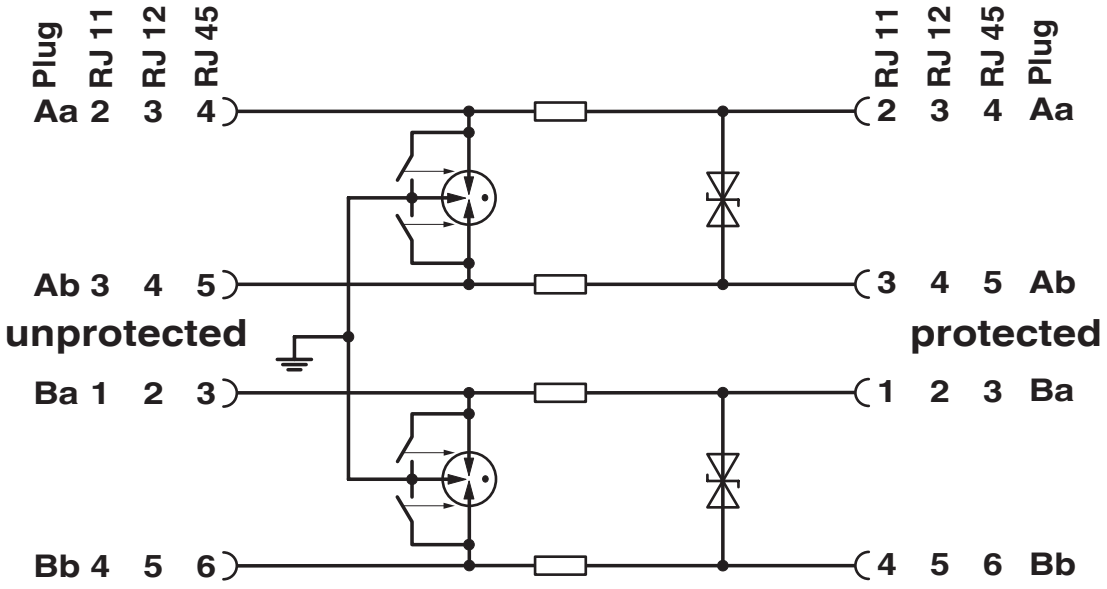

Classifications

ECLASS

ECLASS-13.0	27171503
ECLASS-15.0	27171503

ETIM

ETIM 10.0	EC001466

UNSPSC

UNSPSC 21.0	39121600

Environmental product compliance

EU RoHS

Fulfills EU RoHS substance requirements	Yes
Exemption	6(a), 6(a)-I, 7(a), 7(c)-I

China RoHS

Environment friendly use period (EFUP)	EFUP-50
	An article-related China RoHS declaration table can be found in the download area for the respective article under "Manufacturer declaration". For all articles with EFUP-E, no China RoHS declaration table issued and required.

EU REACH SVHC

REACH candidate substance (CAS No.)	Lead(CAS: 7439-92-1)
SCIP	c3eb5453-7278-4b91-a1ac-a71994e5219e

Phoenix Contact 2026 © - all rights reserved
https://www.phoenixcontact.com

Phoenix Contact USA
586 Fulling Mill Road
Middletown, PA 17057, United States
(+717) 944-1300
info@phoenixcon.com