CB 1/6-2/4 PT-BE - Base element

2800929

https://www.phoenixcontact.com/us/products/2800929

Please be informed that the data shown in this PDF document is generated from our online catalog. Please find the complete data in the user documentation. Our general terms of use for downloads are valid.

Base element with push-in connection technology for CB ... device circuit breakers

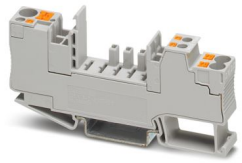

Your advantages

- Fast installation with reduced wiring work with bridging options
- Can be extended at any time with the modular design
- Fast and reliable installation thanks to Push-in connection technology
- Clear assignment of protective plug with coding options

Commercial data

Item number	2800929
Packing unit	10 pc
Minimum order quantity	10 pc
Sales key	CL04
Product key	CLA193
GTIN	4046356690638
Weight per piece (including packing)	33.11 g
Weight per piece (excluding packing)	33.021 g
Customs tariff number	85366990
Country of origin	PL

Technical data

Product properties

Product type	Base element
Product family	CB BE
Type	Base element, DIN rail mounting

Insulation characteristics

Overvoltage category	III
Degree of pollution	3

Electrical properties

Maximum load current	16 A
Nominal voltage U_N	300 V

General

Rated insulation voltage U_i	250 V
Rated surge voltage	4 kV
Insertion/withdrawal cycles	100

Indicator/remote signaling

Connection name	Remote indication circuit
Switching function	Changeover contact

Connection data

Maximum load current	16 A
Connection method	Push-in connection
Conductor cross-section flexible (ferrule without plastic sleeve)	0.5 mm² Connection 1 ... 6 mm² (Connection 1)
Flexible conductor cross-section (ferrule with plastic sleeve)	0.5 mm² Connection 1 ... 6 mm² (Connection 1)
Conductor cross-section flexible (2 conductors with the same cross-section, with TWIN ferrule and plastic sleeve)	0.5 mm² Connection 1 ... 1 mm² Connection 1
Conductor cross-section flexible (ferrule without plastic sleeve)	0.25 mm² Connection 2.1/2.2 ... 4 mm² (Connection 2.1/2.2)
Flexible conductor cross-section (ferrule with plastic sleeve)	0.25 mm² Connection 2.1/2.2 ... 4 mm² (Connection 2.1/2.2)
Conductor cross-section flexible (2 conductors with the same cross-section, with TWIN ferrule and plastic sleeve)	0.5 mm² Connection 2.1/2.2 ... 1 mm² Connection 2.1/2.2
Conductor cross-section flexible (ferrule without plastic sleeve)	0.14 mm² Connection 12/11/14 ... 1 mm² (Connection 12/11/14)
Flexible conductor cross-section (ferrule with plastic sleeve)	0.14 mm² Connection 12/11/14 ... 1.5 mm² (Connection 12/11/14)

Connection cross sections directly pluggable

Conductor cross-section rigid	1 mm² ... 6 mm²
Conductor cross-section flexible (ferrule without plastic sleeve)	0.5 mm² Connection 1 ... 6 mm² Connection 1
Flexible conductor cross-section (ferrule with plastic sleeve)	0.5 mm² Connection 1 ... 6 mm² Connection 1
Conductor cross-section rigid	0.5 mm² ... 6 mm²
Conductor cross-section flexible (ferrule without plastic sleeve)	0.5 mm² Connection 2.1/2.2 ... 4 mm² Connection 2.1/2.2
Flexible conductor cross-section (ferrule with plastic sleeve)	0.75 mm² Connection 2.1/2.2 ... 4 mm² Connection 2.1/2.2

Conductor cross-section rigid	0.25 mm² ... 1.5 mm²
Conductor cross-section flexible (ferrule without plastic sleeve)	0.34 mm² Connection 12/11/14 ... 1 mm² Connection 12/11/14
Flexible conductor cross-section (ferrule with plastic sleeve)	0.34 mm² Connection 12/11/14 ... 1.5 mm² Connection 12/11/14

Connection 1

Connection method	Push-in connection
Stripping length	12 mm
Conductor cross-section flexible min.	0.5 mm²
Conductor cross-section flexible max.	6 mm²
Conductor cross-section, rigid min.	0.5 mm²
Conductor cross-section, rigid max.	6 mm²

Connection 2.1/2.2

Connection method	Push-in connection
Stripping length	12 mm
Conductor cross-section flexible min.	0.2 mm²
Conductor cross-section flexible max.	4 mm²
Conductor cross-section, rigid min.	0.2 mm²
Conductor cross-section, rigid max.	6 mm²

Remote indication circuit

Connection method	Push-in connection
Stripping length	8 mm
Conductor cross-section flexible	0.14 mm² ... 1.5 mm²
Conductor cross-section rigid	0.14 mm² ... 1.5 mm²
Conductor cross-section AWG	26 ... 16
Conductor cross-section, flexible, with ferrule, with plastic sleeve	0.14 mm² ... 1.5 mm²

Dimensions

Dimensional drawing	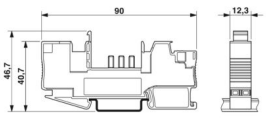
Width	12.3 mm
Height	90 mm
Depth	46.7 mm

Material specifications

Color	gray (RAL 7042)
	black (RAL 9005)
Flammability rating according to UL 94	V0
Insulating material group	I
Insulating material	PA 6.6

Mechanical properties

Mechanical data

Open side panel	No

Environmental and real-life conditions

Ambient conditions

Degree of protection	IP30 (Actuation area)
Ambient temperature (operation)	-30 °C ... 60 °C
Ambient temperature (storage/transport)	-40 °C ... 120 °C

Standards and regulations

Standards/specifications	IEC 60947-7-1

Mounting

Mounting type	DIN rail: 35 mm

Drawings

Dimensional drawing

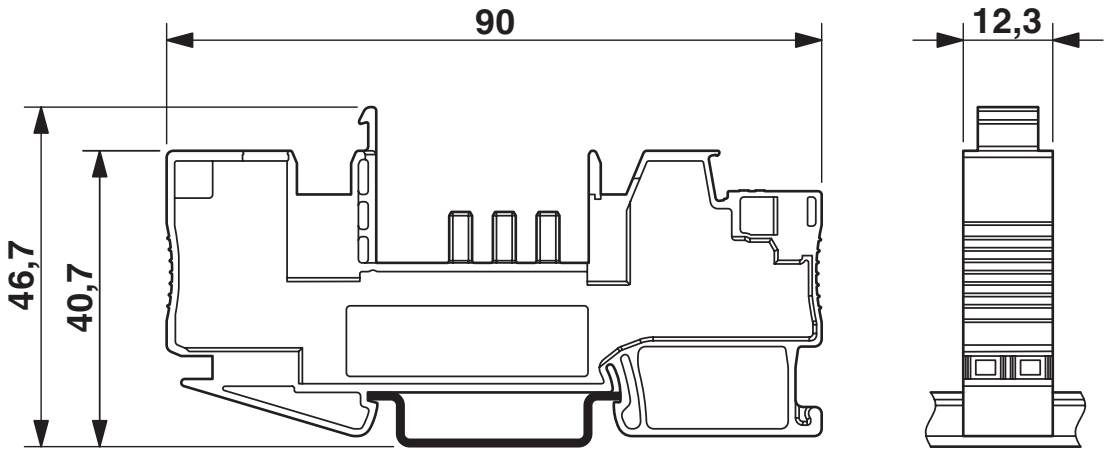

Application drawing

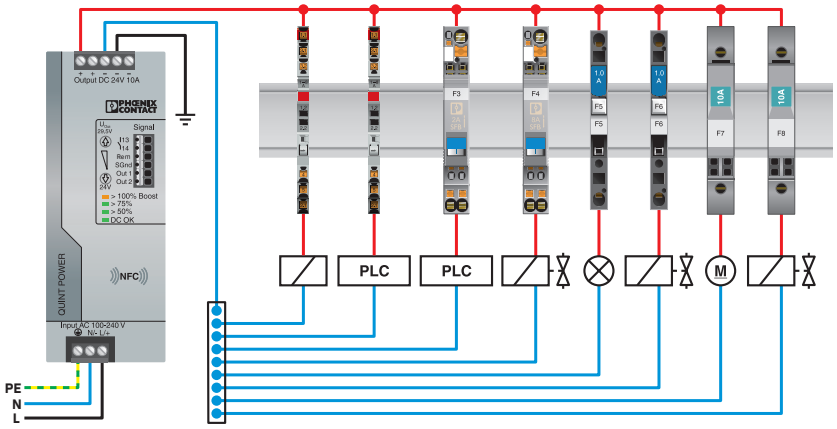

Connection diagram

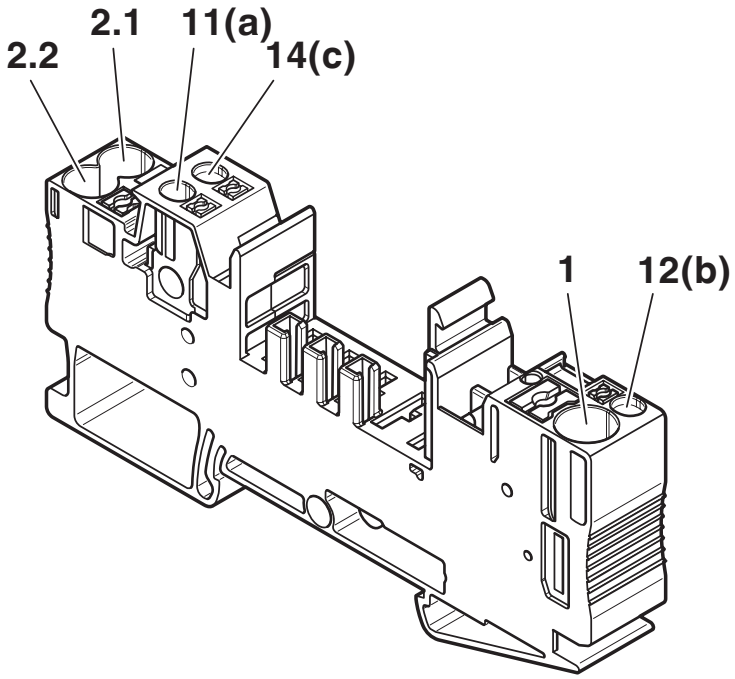

1	12 mm	0.5 - 6 mm² AWG 20-10		
2.1 / 2.2		0.25 - 6 mm² AWG 24-10	0.2 - 4 mm² AWG 24-12	
11(a)/12 (b)/ 14 (c)	8 mm	0.14 - 1.5 mm² AWG 26-16	0.14 - 1 mm² AWG 26-18	0.14 - 1.5 mm² AWG 26-16

Connection of the cables

Approvals

To download certificates, visit the product detail page: https://www.phoenixcontact.com/us/products/2800929

CSA
Approval ID: 2782003

cUL Recognized
Approval ID: File E60425

UL Recognized
Approval ID: File E60425

DNV GL
Approval ID: TAE00003C7

UAE-RoHS
Approval ID: 23-10-88708

cULus Listed
Approval ID: E123528

Classifications

ECLASS

ECLASS-13.0	27140401
ECLASS-15.0	27140401

ETIM

ETIM 10.0	EC003538

UNSPSC

UNSPSC 21.0	39121400

Environmental product compliance

EU RoHS

Fulfills EU RoHS substance requirements	Yes, No exemptions

China RoHS

Environment friendly use period (EFUP)	EFUP-E
	No hazardous substances above the limits

EU REACH SVHC

REACH candidate substance (CAS No.)	No substance above 0.1 wt%

EF3.1 Climate Change

CO2e kg	0.374 kg CO2e

Phoenix Contact 2026 © - all rights reserved
https://www.phoenixcontact.com

Phoenix Contact USA
586 Fulling Mill Road
Middletown, PA 17057, United States
(+717) 944-1300
info@phoenixcon.com