# CB TM1 5A F1 P - Thermal-magnetic device circuit breaker

2800862

https://www.phoenixcontact.com/us/products/2800862

Please be informed that the data shown in this PDF document is generated from our online catalog. Please find the complete data in the user documentation. Our general terms of use for downloads are valid.



Thermal-magnetic device circuit breaker, 1-pos., tripping characteristic F1 (fast-blow), 1 changeover contact, plug for base element.

## Your advantages

- Individually adjustable with protective plugs
- Fast tripping in the event of an error with the aid of the F1 characteristic curve
- Protective plug with fixed nominal current value as protection against unintentional changes
- Increased safety with electrical isolation in the event of errors

## Commercial data

| | |
|---|---|
| Item number | 2800862 |
| Packing unit | 1 pc |
| Minimum order quantity | 1 pc |
| Sales key | CL04 |
| Product key | CLA124 |
| GTIN | 4046356690225 |
| Weight per piece (including packing) | 44.9 g |
| Weight per piece (excluding packing) | 41.7 g |
| Customs tariff number | 85362010 |
| Country of origin | ID |

## Technical data

### Notes

| | |
|---|---|
| General | When mounted in rows, the nominal device current can be limited to just 80% or must be overdimensioned accordingly. |

### Product properties

| | |
|---|---|
| Product type | Thermomagnetic device circuit breakers |
| Product family | CB TM |
| Type | Male |
| Number of positions | 1 |
| No. of channels | 1 |

Insulation characteristics

| | |
|---|---|
| Degree of pollution | 2 |

### Electrical properties

| | |
|---|---|
| Fuse type | Automatic device |

General

| | |
|---|---|
| Rated voltage | 50 V DC (IEC 60934) |
| | 50 V DC (UL 1077) |
| | 50 V DC (UL 508 - with plug-in base) |
| Rated insulation voltage $U_i$ | 277 V AC (UL 1077) |
| | 250 V AC (IEC 60934) |
| Rated current $I_N$ | 5 A (IEC 60934) |
| | inductive load according to UL 1077 |
| | 5 A DC (low-induction load according to UL 1077) |
| | 5 A DC (inductive load according to UL 508 - with plug-in base) |
| | 5 A DC (low-induction load according to UL 508 - with plug-in base) |
| Rated surge voltage | 2.5 kV (Increased insulation in actuation area) |
| Insulation resistance $R_{iso}$ | > 100 MΩ (500 V DC) |
| Auxiliary circuit | 277 V AC / 0.5 A (Low-induction) |
| | 277 V AC / 1 A (Low-induction, maximum of 2000 cycles) |
| | 50 V DC / 1 A (Low-induction) |
| Type of actuation | S type |
| Tripping method | TM (thermal-magnetic) |
| Tripping level | Trip-free mechanism (positive) |
| Device resistance | 60 mΩ |
| Switch-on delay | typ. 2 ms |
| Required backup fuse | 20 A ($I > I_{cn}$) |
| Rated short-circuit switching capacity $I_{cn}$ | 600 A (50 V DC) |
| Short-circuit switching capacity | 1000 A AC (277 V AC) |
| | 1000 A DC (50 V DC) |

| | |
|---|---|
| Dielectric strength | 3000 V AC (Actuation area) |
| | 1500 V AC (Main to auxiliary circuit) |
| | 1500 V AC (Open main circuit) |
| | 1000 V AC (Open auxiliary circuit) |
| Switching cycles, max. | 6000 (at 1 x $I_n$) |
| Fuse | F1 (fast blow) |
| Power dissipation | 1.5 W (in nominal operation per channel) |
| Voltage drop | 0.31 V (at 1 x $I_n$) |
| Contact switching type | 1 changeover contact |

Auxiliary contact

| | |
|---|---|
| Minimum operating voltage $U_{min}$ DC | 10 V |
| Maximum operating voltage $U_{max}$ DC | 240 V |
| Maximum operating voltage $U_{max.}$ AC | 240 V |
| Minimum operating current $I_{min}$ | 10 mA |
| Max. operating current $I_{max}$ | 1 A |

## Connection data

| | |
|---|---|
| Connection method | pluggable |
| Connection method | pluggable |

## Dimensions

| | |
|---|---|
| Dimensional drawing | 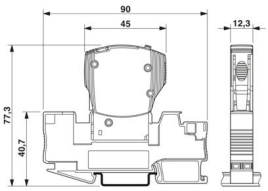 |
| Width | 12.3 mm |
| Height | 45 mm |
| Depth | 52 mm |
| Complete module width | 12.3 mm |
| Complete module height | 90 mm |
| Complete module depth | 77.3 mm |

## Material specifications

| | |
|---|---|
| Color | gray (RAL 7042) |
| | black (RAL 9005) |
| Flammability rating according to UL 94 | V-0 |
| Insulating material group | II |

## Mechanical properties

Mechanical data

| | |
|---|---|
| Open side panel | No |

## Environmental and real-life conditions

### Ambient conditions

| | |
|---|---|
| Degree of protection | IP30 (Actuation area) |
| Ambient temperature (operation) | -30 °C ... 60 °C |
| Ambient temperature (storage/transport) | -40 °C ... 80 °C |
| Humidity test | 240 h, 95 % RH, 40 °C |
| Shock (operation) | 15g (IEC 60068-2-27, Test Ea) |
| Vibration (operation) | 5g (IEC 60068-2-6, Test Fc) |

## Approvals

### UL approval

| | |
|---|---|
| Identification | UL Listed UL 508 |
| | UL/C-UL Recognized UL 1077 |

### CSA

| | |
|---|---|
| Identification | CSA CAN/CSA-C22.2 No. 235-04 |

### Shipbuilding approval

| | |
|---|---|
| Identification | DNV GL |

## Standards and regulations

| | |
|---|---|
| Standards/specifications | EN 60934 |

## Mounting

| | |
|---|---|
| Mounting type | on base element |

## Drawings

Dimensional drawing

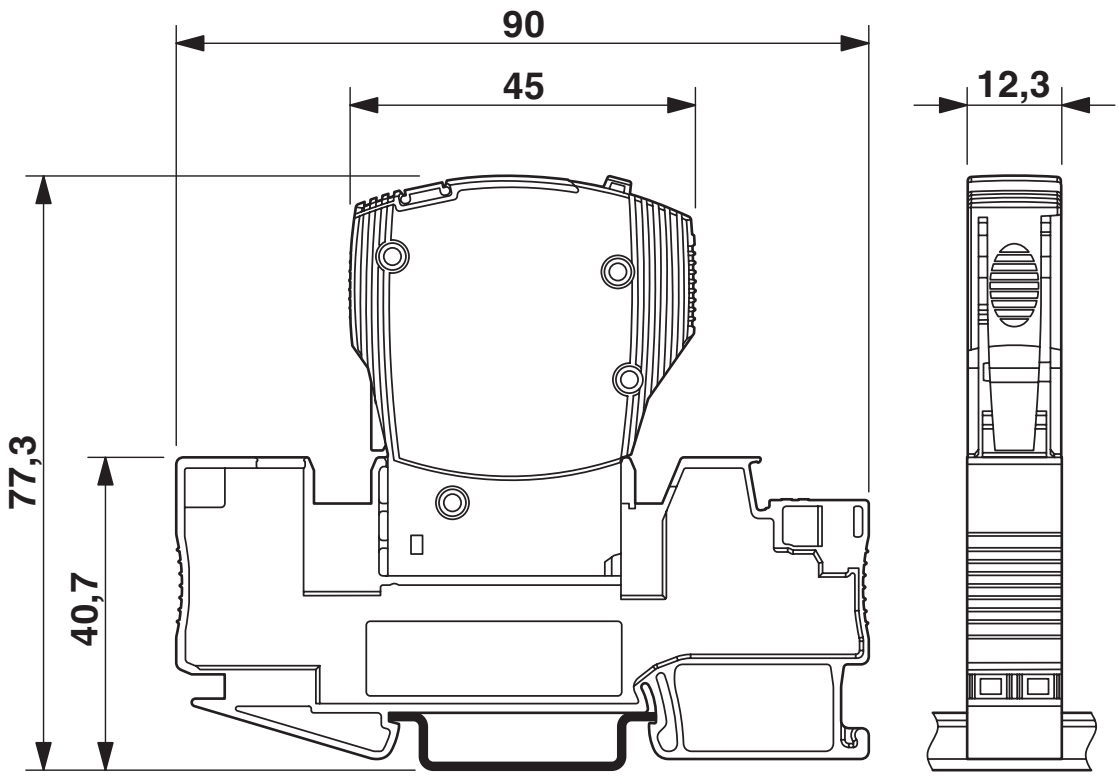


The figure shows the complete module consisting of a base element and connector

Application drawing

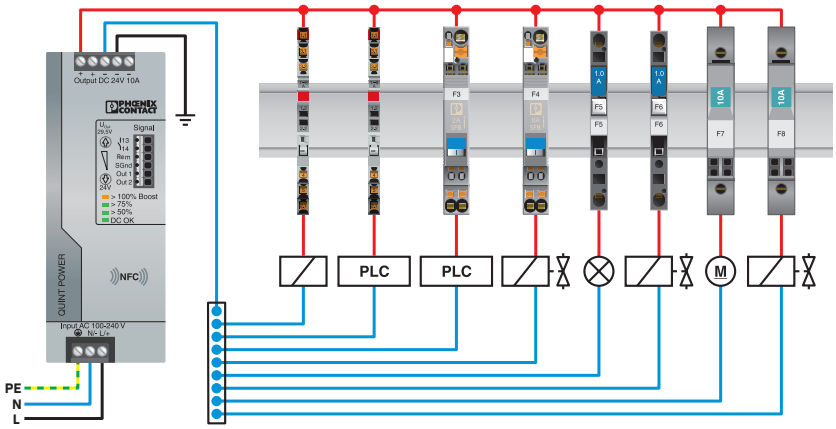

# CB TM1 5A F1 P - Thermal-magnetic device circuit breaker

2800862

https://www.phoenixcontact.com/us/products/2800862

Application drawing

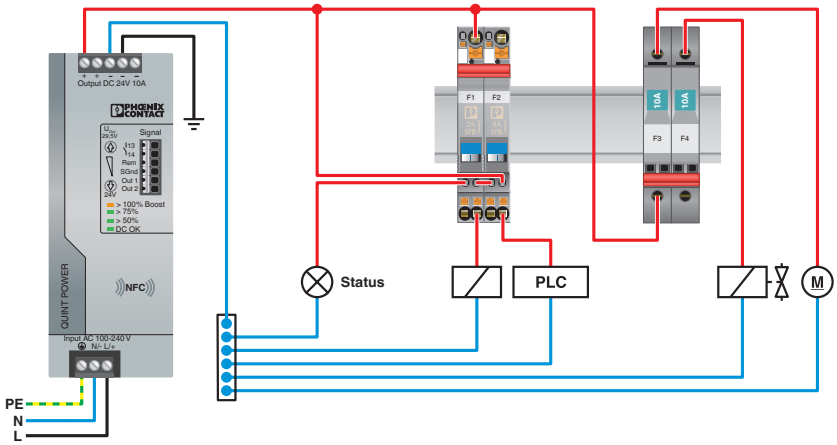


Diagram

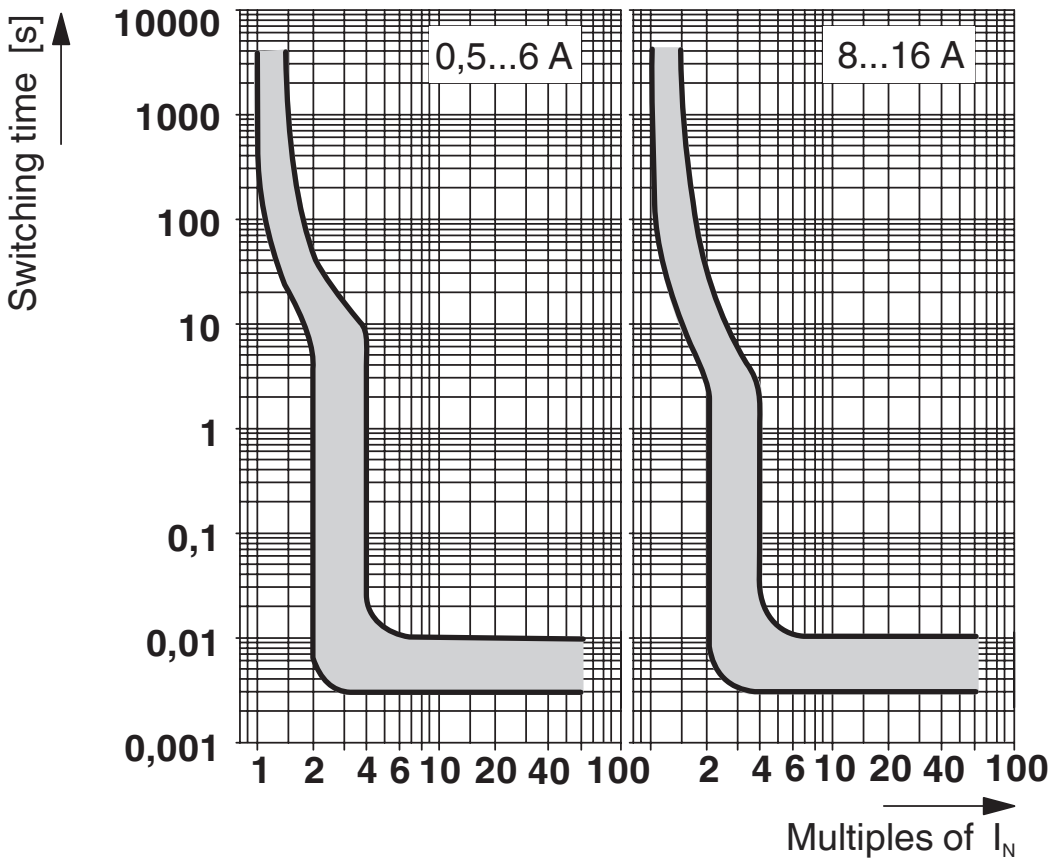


Trigger characteristic in the DC range

Circuit diagram

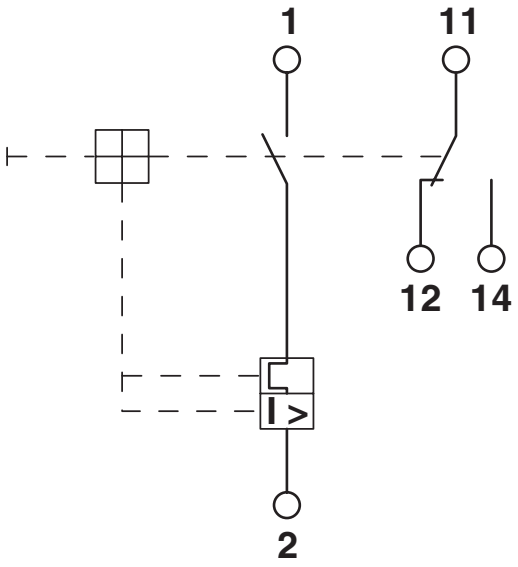

## Approvals

To download certificates, visit the product detail page: https://www.phoenixcontact.com/us/products/2800862

**cUL Recognized**
Approval ID: FILE E 140459

**UL Recognized**
Approval ID: FILE E 140459

**DNV GL**
Approval ID: TAE00003C7

**VDE Zeichengenehmigung**
Approval ID: 40034683

**UL Listed**
Approval ID: FILE E 172140

**CCC**
Approval ID: 2025010307749779

**CSA**
Approval ID: 2786957

**cUL Listed**
Approval ID: FILE E 172140

**KC**
Approval ID: SW05012-15003

**UAE-RoHS**
Approval ID: 22-09-50937

## Classifications

### ECLASS

| | |
|---|---|
| ECLASS-13.0 | 27140401 |
| ECLASS-15.0 | 27140401 |

### ETIM

| | |
|---|---|
| ETIM 10.0 | EC003538 |

### UNSPSC

| | |
|---|---|
| UNSPSC 21.0 | 39121400 |

## Environmental product compliance

EU RoHS

| | |
|---|---|
| Fulfills EU RoHS substance requirements | Yes, No exemptions |

China RoHS

| | |
|---|---|
| Environment friendly use period (EFUP) | EFUP-E |
| | No hazardous substances above the limits |

EU REACH SVHC

| | |
|---|---|
| REACH candidate substance (CAS No.) | No substance above 0.1 wt% |

EF3.1 Climate Change

| | |
|---|---|
| CO2e kg | 4.358 kg CO2e |


Phoenix Contact 2026 © - all rights reserved
https://www.phoenixcontact.com



Phoenix Contact USA
586 Fulling Mill Road
Middletown, PA 17057, United States
(+717) 944-1300
info@phoenixcon.com