CB TM1 6A SFB P - Thermal-magnetic device circuit breaker

2800841

https://www.phoenixcontact.com/us/products/2800841

Please be informed that the data shown in this PDF document is generated from our online catalog. Please find the complete data in the user documentation. Our general terms of use for downloads are valid.



Thermal-magnetic device circuit breaker, 1-pos., tripping characteristic SFB, 1 changeover contact, plug for base element.

Your advantages

- Individually adjustable with protective plugs
- Fuse protection for above-average conductor lengths with the aid of the SFB characteristic curve
- Protective plug with fixed nominal current value as protection against unintentional changes
- Increased safety with electrical isolation in the event of errors

Commercial data

Item number	2800841
Packing unit	1 pc
Minimum order quantity	1 pc
Sales key	CL04
Product key	CLA124
GTIN	4046356689922
Weight per piece (including packing)	43 g
Weight per piece (excluding packing)	26.47 g
Customs tariff number	85362010
Country of origin	ID

Technical data

Notes

General	When mounted in rows, the nominal device current can be limited to just 80% or must be overdimensioned accordingly.

Product properties

Product type	Thermomagnetic device circuit breakers
Product family	CB TM
Type	Male
Number of positions	1
No. of channels	1

Insulation characteristics

Degree of pollution	2

Electrical properties

Fuse type	Automatic device

General

Rated voltage	50 V DC (IEC 60934)
	50 V DC (UL 1077)
	50 V DC (UL 508 - with plug-in base)
Rated insulation voltage U_i	277 V AC (UL 1077)
	250 V AC (IEC 60934)
Rated current I_N	6 A (IEC 60934)
	6 A (low-induction load according to UL 1077)
	6 A (low-induction load according to UL 508 - with plug-in base)
Rated surge voltage	2.5 kV (Increased insulation in actuation area)
Insulation resistance R_{iso}	> 100 MΩ (500 V DC)
Auxiliary circuit	277 V AC / 0.5 A (Low-induction)
	277 V AC / 1 A (Low-induction, maximum of 2000 cycles)
	50 V DC / 1 A (Low-induction)
Type of actuation	S type
Tripping method	TM (thermal-magnetic)
Tripping level	Trip-free mechanism (positive)
Device resistance	50 mΩ
Required backup fuse	24 A ($I > I_{cn}$)
Rated short-circuit switching capacity I_{cn}	600 A (50 V DC)
Short-circuit switching capacity	1000 A AC (277 V AC)
	1000 A DC (50 V DC)
Dielectric strength	3000 V AC (Actuation area)
	1500 V AC (Main to auxiliary circuit)
	1500 V AC (Open main circuit)
	1000 V AC (Open auxiliary circuit)

Switching cycles, max.	6000 (at 1 x I_n)
Fuse	SFB
Power dissipation	1.8 W (in nominal operation per channel)
Voltage drop	0.29 V (at 1 x I_n)
Contact switching type	1 changeover contact

Auxiliary contact

Minimum operating voltage U_{min} DC	10 V
Maximum operating voltage U_{max} DC	240 V
Maximum operating voltage $U_{max.}$ AC	240 V
Minimum operating current I_{min}	10 mA
Max. operating current I_{max}	1 A

Connection data

Connection method	pluggable
Connection method	pluggable

Dimensions

Dimensional drawing	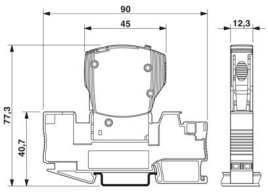
Width	12.3 mm
Height	45 mm
Depth	52 mm
Complete module width	12.3 mm
Complete module height	90 mm
Complete module depth	77.3 mm

Material specifications

Color	gray (RAL 7042)
	black (RAL 9005)
Flammability rating according to UL 94	V-0
Insulating material group	II

Mechanical properties

Mechanical data

Open side panel	No

Environmental and real-life conditions

Ambient conditions

Degree of protection	IP30 (Actuation area)

Ambient temperature (operation)	-30 °C ... 60 °C
Ambient temperature (storage/transport)	-40 °C ... 80 °C
Humidity test	240 h, 95 % RH, 40 °C
Shock (operation)	30g (IEC 60068-2-27, Test Ea)
Vibration (operation)	8g (IEC 60068-2-6, Test Fc)

Approvals

UL approval

Identification	UL Listed UL 508
	UL/C-UL Recognized UL 1077

CSA

Identification	CSA CAN/CSA-C22.2 No. 235-04

Shipbuilding approval

Identification	DNV GL

Standards and regulations

Standards/specifications	EN 60934

Mounting

Mounting type	on base element

CB TM1 6A SFB P - Thermal-magnetic device circuit breaker

2800841

https://www.phoenixcontact.com/us/products/2800841

Drawings

Dimensional drawing

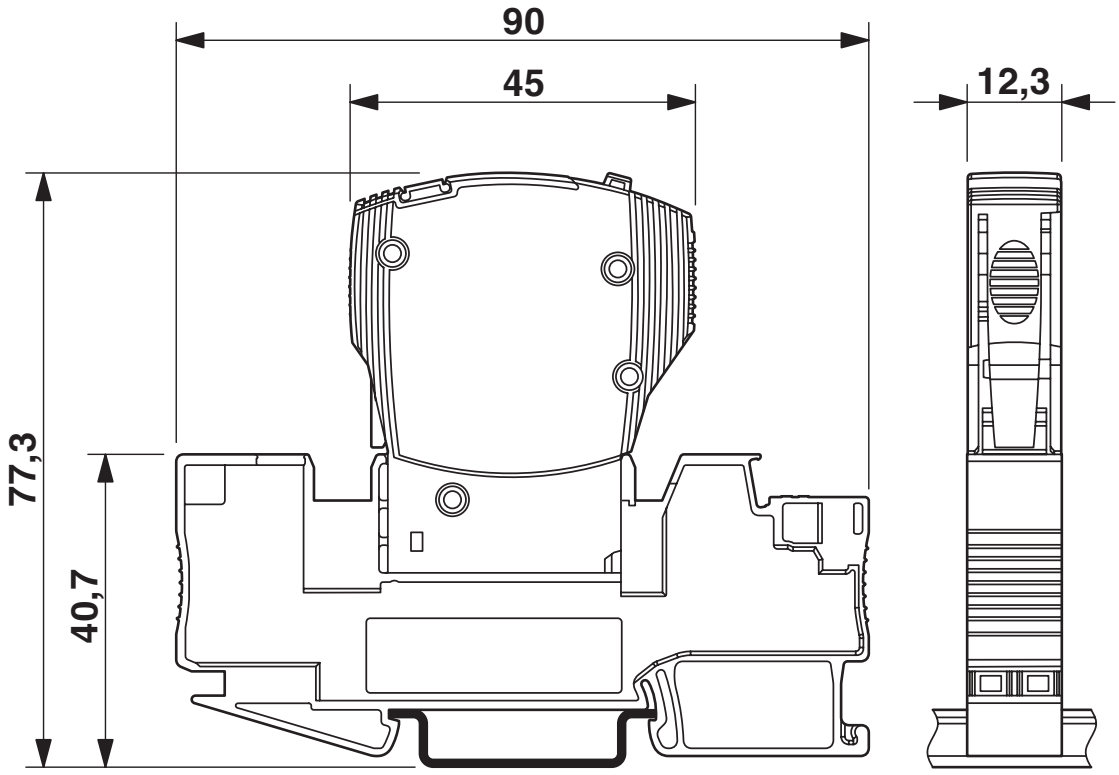

The figure shows the complete module consisting of a base element and connector

Application drawing

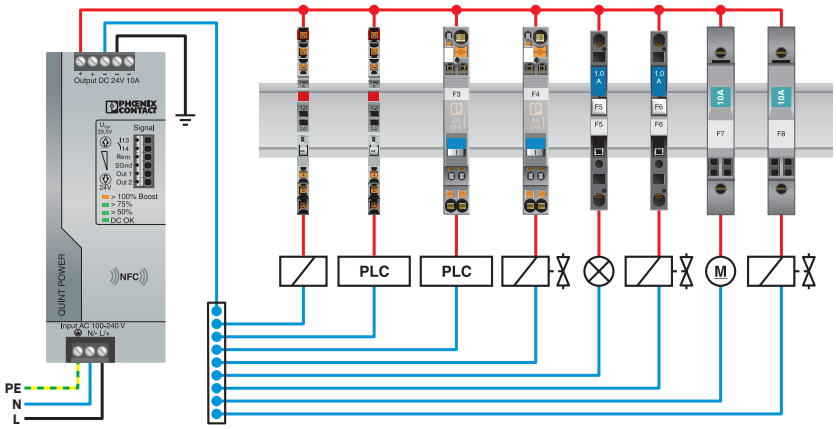

Application drawing

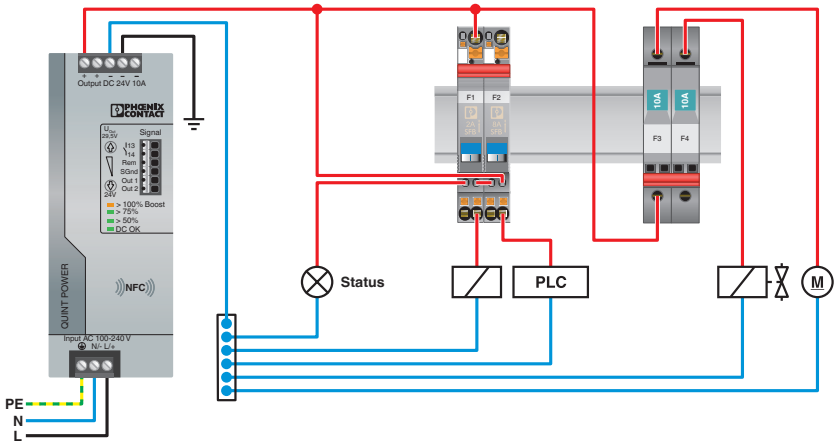

Diagram

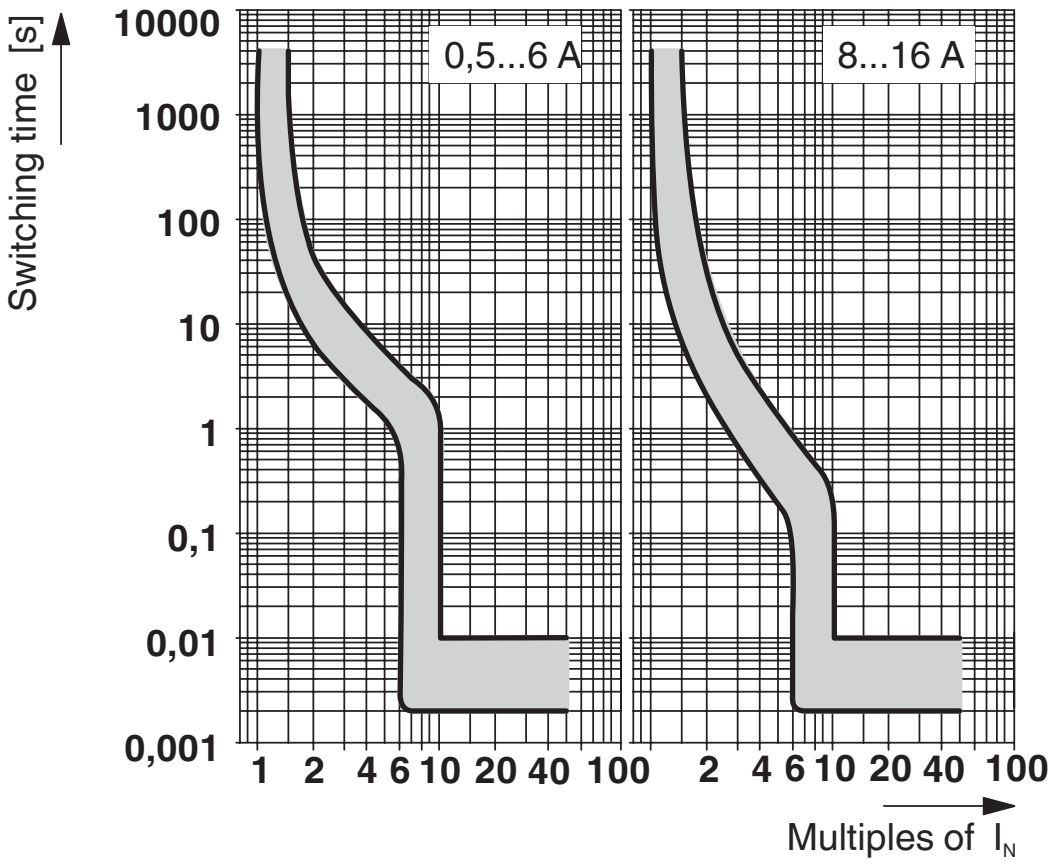

Trigger characteristic in the DC range

Circuit diagram

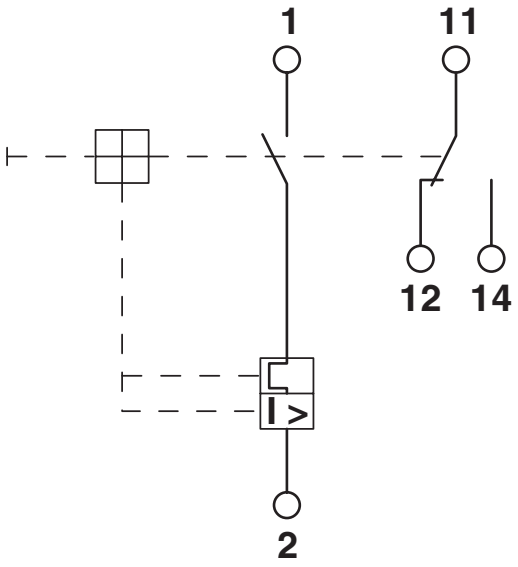

Approvals

To download certificates, visit the product detail page: https://www.phoenixcontact.com/us/products/2800841

cUL Recognized
Approval ID: FILE E 140459

UL Recognized
Approval ID: FILE E 140459

DNV GL
Approval ID: TAE00003C7

VDE Zeichengenehmigung
Approval ID: 40034683

UL Listed
Approval ID: FILE E 172140

CCC
Approval ID: 2025010307749779

CSA
Approval ID: 2786957

cUL Listed
Approval ID: FILE E 172140

KC
Approval ID: SW05012-15002

UAE-RoHS
Approval ID: 22-09-50937

Classifications

ECLASS

ECLASS-13.0	27140401
ECLASS-15.0	27140401

ETIM

ETIM 10.0	EC003538

UNSPSC

UNSPSC 21.0	39121400

Environmental product compliance

EU RoHS

Fulfills EU RoHS substance requirements	Yes, No exemptions

China RoHS

Environment friendly use period (EFUP)	EFUP-E
	No hazardous substances above the limits

EU REACH SVHC

REACH candidate substance (CAS No.)	No substance above 0.1 wt%

EF3.1 Climate Change

CO2e kg	6.146 kg CO2e

Phoenix Contact 2026 © - all rights reserved
https://www.phoenixcontact.com

Phoenix Contact USA
586 Fulling Mill Road
Middletown, PA 17057, United States
(+717) 944-1300
info@phoenixcon.com