VAL-MS 1000DC-PV-ST - Type 2 surge protection plug

2800624

https://www.phoenixcontact.com/us/products/2800624

Please be informed that the data shown in this PDF document is generated from our online catalog. Please find the complete data in the user documentation. Our general terms of use for downloads are valid.



Replacement plug for PV arrester combinations from the VAL-MS 1000DC-PV-... product range

Your advantages

- Increased safety, thanks to compliance with standard EN 50539-11
- Reliable contact, thanks to integrated rotating latch
- Easy replacement, thanks to plug-in arresters
- Optimum inverter protection, thanks to low protection level
- Efficient replacement of defective plugs, thanks to visual status indicator
- Protection against mismatching, thanks to keyed plugs and base elements

Commercial data

Item number	2800624
Packing unit	1 pc
Minimum order quantity	1 pc
Sales key	CL01
Product key	CL1324
GTIN	4046356615099
Weight per piece (including packing)	74.6 g
Weight per piece (excluding packing)	73 g
Customs tariff number	85363090
Country of origin	CN

Technical data

Product properties

Product type	Replacement plug
Product family	VALVETRAB MS
IEC test classification	PV II
	PV T2
EN type	T2
IEC power supply system	DC
Type	Male
Environment	Indoor
Installation location of the disconnect device	Internal
Accessibility	Accessible
End-of-life mode	OCFM (Open-Circuit Failure Mode)
Surge protection fault message	optical

Insulation characteristics

Overvoltage category	III
Pollution degree	2

Connection data

Connection method	pluggable

Dimensions

Dimensional drawing	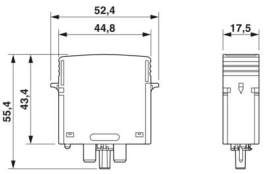
Width	17.5 mm
Height	52.4 mm
Depth	55.3 mm
Horizontal pitch	1 HP

Material specifications

Color	black (RAL 9005)
Flammability rating according to UL 94	V-0
CTI value of material	600
Insulating material	PA 6.6-FR
Material group	I
Housing material	PA 6.6-FR

Protective circuit

Standby power consumption P_C	≤ 25 mVA
Nominal discharge current I_n (8/20) µs	15 kA
Maximum discharge current I_{max} (8/20) µs	40 kA
Voltage protection level U_p	≤ 1.9 kV
Residual voltage U_{res}	≤ 1.9 kV (at I_n)
	≤ 1.5 kV (at 5 kA)
	≤ 1.7 kV (at 10 kA)
	≤ 2 kV (at 20 kA)
	≤ 2.3 kV (at 30 kA)
	≤ 2.5 kV (at 40 kA)
Response time t_A	≤ 25 ns

Protective circuit DC voltage side (DC)

Maximum continuous operating voltage U_{CPV}	585 V DC
Short-circuit current rating I_{SCPV}	2000 A
Open-circuit voltage U_{OCSTC}	≤ 487.5 V DC
Maximum discharge current I_{max} (8/20) µs	40 kA
Response time t_A	≤ 25 ns
Insulation resistance R_{iso}	> 5 GΩ (at 500 V DC)
Nominal discharge current I_n (8/20) µs	15 kA
Continuous operating current I_{CPV}	< 20 µA
Maximum continuous operating voltage U_{CPV}	585 V DC
Short-circuit current rating I_{SCPV}	2000 A
Residual voltage U_{res}	≤ 1.9 kV (at I_n)
	≤ 1.5 kV (at 5 kA)
	≤ 1.7 kV (at 10 kA)
	≤ 2 kV (at 20 kA)
	≤ 2.3 kV (at 30 kA)
	≤ 2.5 kV (at 40 kA)
Voltage protection level U_p	≤ 1.9 kV
Standby power consumption P_C	≤ 25 mVA

Environmental and real-life conditions

Ambient conditions

Degree of protection	IP20
Ambient temperature (operation)	-40 °C ... 80 °C
Ambient temperature (storage/transport)	-40 °C ... 80 °C
Altitude	≤ 2000 m (amsl)
Permissible humidity (operation)	5 % ... 95 %
Shock (operation)	60g (Half-sine / 11 ms / 3x ±X, ±Y, ±Z)
Vibration (operation)	7.5g (5-500 Hz/2.5 h/XYZ)

Approvals

UL specifications

Maximum continuous operating voltage MCOV	1170 V DC
Short-circuit current rating (SCCR)	50 kA
Voltage protection rating VPR	3 kV
Nominal discharge current I_n	10 kA
Mode of protection	(L+) - (L-)
	(L+) - G
	(L-) - G
Nominal voltage	1170 V DC
Power distribution system	DC PV
SPD Type	1CA

Standards and regulations

Standards/specifications	EN 61643-31
Note	2019
Standards/specifications	IEC 61643-31
Note	2018

Mounting

Mounting type	on base element

Drawings

Dimensional drawing

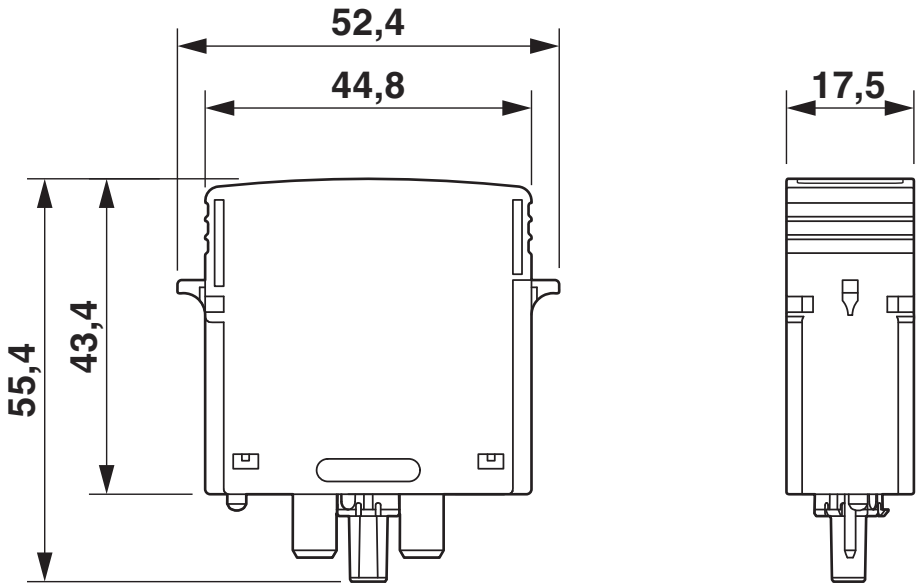

Circuit diagram



Approvals

To download certificates, visit the product detail page: https://www.phoenixcontact.com/us/products/2800624

cUL Recognized
Approval ID: FILE E 330181

UL Recognized
Approval ID: FILE E 330181

KEMA-KEUR
Approval ID: 71-123544 REV.3

IECEE CB Scheme
Approval ID: NL-81006/A1

CCA
Approval ID: NTR-NL 7937

Classifications

ECLASS

ECLASS-13.0	27171492
ECLASS-15.0	27171492

ETIM

ETIM 10.0	EC002496

UNSPSC

UNSPSC 21.0	39121620

Environmental product compliance

EU RoHS

Fulfills EU RoHS substance requirements	Yes, No exemptions

China RoHS

Environment friendly use period (EFUP)	EFUP-E
	No hazardous substances above the limits

EU REACH SVHC

REACH candidate substance (CAS No.)	No substance above 0.1 wt%

Phoenix Contact 2026 © - all rights reserved
https://www.phoenixcontact.com

Phoenix Contact USA
586 Fulling Mill Road
Middletown, PA 17057, United States
(+717) 944-1300
info@phoenixcon.com