VAL-MS 230 ST - Type 2 surge protection plug

2798844

https://www.phoenixcontact.com/us/products/2798844

Please be informed that the data shown in this PDF document is generated from our online catalog. Please find the complete data in the user documentation. Our general terms of use for downloads are valid.



Surge protection connector type 2 with high-capacity varistor for VAL-MS base element, thermal monitoring, visual fault warning. Design: 230 V AC

Your advantages

- Quality proven millions of times over in the widest range of applications
- Rapid installation with bridges, thanks to industry-standard overall width of 1 HP
- Easy testing and insulation measurement, thanks to pluggable protection modules
- Wide range of applications due to various nominal voltages
- High degree of modularity provides individual solutions for every application

Commercial data

Item number	2798844
Packing unit	10 pc
Minimum order quantity	1 pc
Sales key	CL18
Product key	CL1321
GTIN	4017918073947
Weight per piece (including packing)	42.4 g
Weight per piece (excluding packing)	41.1 g
Customs tariff number	85363030
Country of origin	TR

Technical data

Product properties

Product type	Replacement plug
Product family	VALVETRAB MS
IEC test classification	II
	T2
EN type	T2
IEC power supply system	TN
	TT
Type	DIN rail module, two-section, divisible
Number of positions	1
Surge protection fault message	optical
Arrester can be tested with CHECKMASTER from software version:	From SW rev. 1.10

Insulation characteristics

Overvoltage category	III
Pollution degree	2

Electrical properties

Nominal frequency f_N	50 Hz (60 Hz)

Connection data

Connection method	pluggable

Dimensions

Dimensional drawing	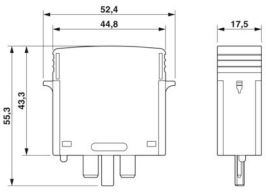
Width	17.5 mm
Height	52.4 mm
Depth	55.3 mm
Horizontal pitch	1 HP

Material specifications

Color	black (RAL 9005)
Flammability rating according to UL 94	V-0
CTI value of material	600
Insulating material	PA 6.6
Material group	I

Housing material	PA 6.6

Protective circuit

Mode of protection	L-N
	L-PEN
Direction of action	1L-N/PE
Nominal voltage U_N	240/415 V AC (TN)
	240/415 V AC (TT)
Nominal frequency f_N	50 Hz (60 Hz)
Maximum continuous operating voltage U_C	275 V AC
Protective conductor current I_{PE}	≤ 0.45 mA
Standby power consumption P_C	≤ 120 mVA
Nominal discharge current I_n (8/20) µs	20 kA
Maximum discharge current I_{max} (8/20) µs	40 kA
Short-circuit current rating I_{SCCR}	25 kA
Voltage protection level U_p	≤ 1.35 kV
Residual voltage U_{res}	≤ 1.35 kV (at I_n)
	≤ 1.1 kV (at 10 kA)
	≤ 1 kV (at 5 kA)
	≤ 0.9 kV (at 3 kA)
TOV behavior at U_T	335 V AC (5 s / withstand mode)
	440 V AC (120 min / safe failure mode)
Response time t_A	≤ 25 ns
Max. backup fuse with branch wiring	125 A (gG)

Environmental and real-life conditions

Ambient conditions

Degree of protection	IP20
Ambient temperature (operation)	-40 °C ... 80 °C
Ambient temperature (storage/transport)	-40 °C ... 80 °C
Altitude	≤ 2000 m (amsl)
Permissible humidity (operation)	5 % ... 95 %
Shock (operation)	25g (Half-sine / 11 ms / 3x ±X, ±Y, ±Z)
Vibration (operation)	5g (10 ... 500 Hz / 2.5 h / X, Y, Z)

Approvals

UL specifications

Maximum continuous operating voltage MCOV (L-N)	275 V AC
Nominal discharge current I_n (L-N)	20 kA
Mode of protection	L-N
Nominal voltage	230 V AC
Power distribution system	Single phase
Nominal frequency	50/60 Hz

Measured limiting voltage MLV (L-N)	1910 V
SPD Type	4CA

Standards and regulations

Standards/specifications	IEC 61643-11
Note	2011
Standards/specifications	EN 61643-11
Note	2012

Mounting

Mounting type	on base element

Drawings

Dimensional drawing

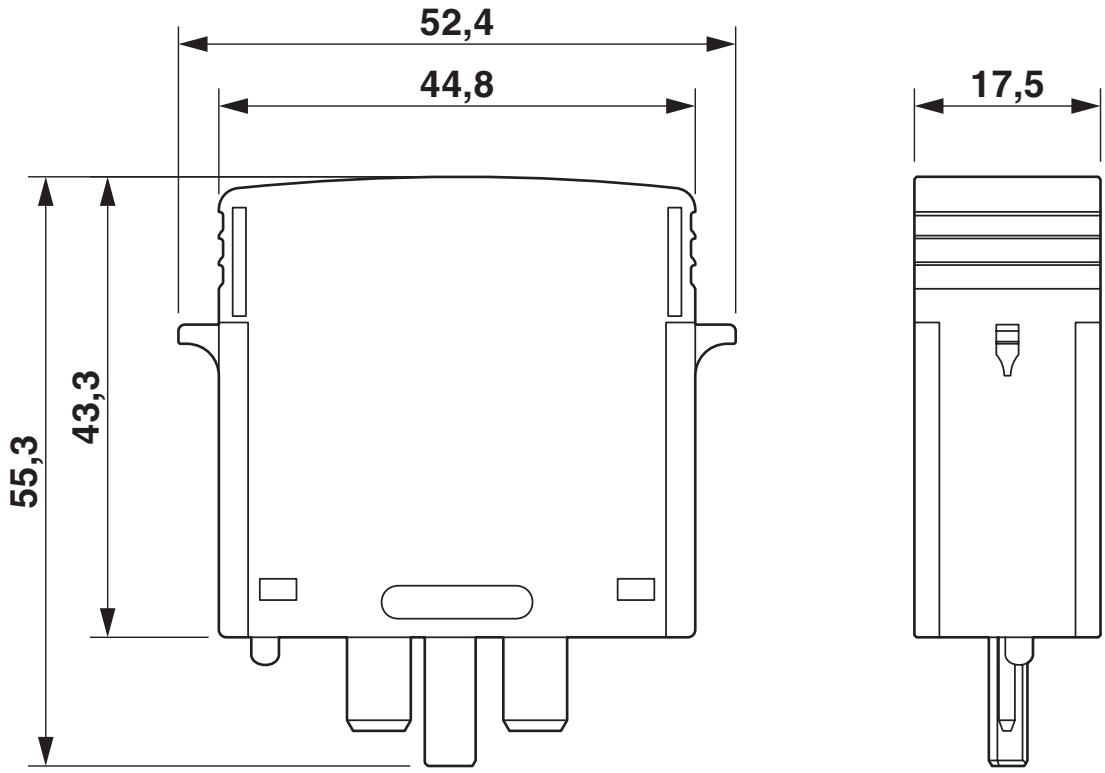

Circuit diagram



Approvals

To download certificates, visit the product detail page: https://www.phoenixcontact.com/us/products/2798844

cUL Recognized
Approval ID: FILE E 330181

UL Recognized
Approval ID: FILE E 330181

IECEE CB Scheme
Approval ID: AT 2905/M1

CCA
Approval ID: NTR-AT 1947-A

KEMA-KEUR
Approval ID: 71-148002

DNV GL
Approval ID: TAE000041M

CSA
Approval ID: 13631

ÖVE
Approval ID: 18583-001-17

UAE-RoHS
Approval ID: 22-09-51250

ÖVE
Approval ID: 18583-001-18

Classifications

ECLASS

ECLASS-13.0	27171292
ECLASS-15.0	27171292

ETIM

ETIM 10.0	EC002496

UNSPSC

UNSPSC 21.0	39121600

Environmental product compliance

EU RoHS

Fulfills EU RoHS substance requirements	Yes, No exemptions

China RoHS

Environment friendly use period (EFUP)	EFUP-E
	No hazardous substances above the limits

EU REACH SVHC

REACH candidate substance (CAS No.)	No substance above 0.1 wt%

Phoenix Contact 2026 © - all rights reserved
https://www.phoenixcontact.com

Phoenix Contact USA
586 Fulling Mill Road
Middletown, PA 17057, United States
(+717) 944-1300
info@phoenixcon.com