SUBCON 9/F-SH - D-SUB bus connector

2761499

https://www.phoenixcontact.com/us/products/2761499

Please be informed that the data shown in this PDF document is generated from our online catalog. Please find the complete data in the user documentation. Our general terms of use for downloads are valid.



D-SUB connector, 9-pos. socket, one 35° cable outlet, universal type for all systems, pin assignment: 1, 2, 3, 4, 5, 6, 7, 8, 9 to screw connection terminal block

Product description

The 9-pos. version of the SUBCON-... connector range is not just suitable for INTERBUS, but is positively ideal. A whole host of further applications are opened up by having all the connections assigned to their own 1 mm^2 screw terminal block. The range covers SUBCON plugs for point-to-point connections with a cable infeed in 9, 15 and 25-pos. male or female versions. The optional fastening screw SUBCON-SHORT-SCREW is available as an accessory for narrow installation conditions. The screw is completely integrated into the housing by not having a knurl.

Your advantages

- Easy assembly thanks to knurled screws
- Can be used universally
- High level of EMC
- Flexibility in terms of cable entry selection
- Assembly under field conditions
- Change to the D-SUB orientation through a reversible connection block

ELEKTROGERÄTE RÜCKNAHME

Commercial data

Item number	2761499
Packing unit	1 pc
Minimum order quantity	1 pc
Sales key	DN10
Product key	DNC511
GTIN	4017918064730

Weight per piece (including packing)	44 g
Weight per piece (excluding packing)	49.1 g
Customs tariff number	85366990
Country of origin	DE

Technical data

Notes

Note on application

Note on application	Only for industrial use

Utilization restriction

CCCex note	Use in potentially explosive areas is not permitted in China.

Product properties

Product type	Data plug
MTTF	6706 Years (SN 29500 standard, temperature 25°C, operating cycle 21%)
	1817 Years (SN 29500 standard, temperature 40°C, operating cycle 34.25%)
	155 Years (SN 29500 standard, temperature 40°C, operating cycle 100%)
Pin assignment	All connections are 1:1 on the screw terminal block

Electrical properties

Nominal voltage U_N	30 V AC/DC
Nominal current I_N	100 mA
Transmission medium	Copper

Connection data

D-SUB connection

Connection method	D-SUB socket

PCB connection

Connection method	Screw connection
Stripping length	5 mm
Conductor cross-section, rigid min.	0.14 mm²
Conductor cross-section, rigid max.	1.5 mm²
Conductor cross-section flexible min.	0.14 mm²
Conductor cross-section flexible max.	1 mm²
Single-wire/terminal point, rigid AWG min.	26
Single-wire/terminal point, rigid AWG max.	16
Min. AWG conductor cross-section, flexible	26
Max. AWG conductor cross-section, flexible	18
Tightening torque	0.22 Nm ... 0.25 Nm

Interfaces

Signal	RS-232
	RS-422

	RS-485

Dimensions

Dimensional drawing	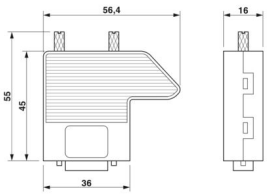
Width	16 mm
Height	55 mm
Length	56.5 mm

Material specifications

Color (Housing)	white aluminium (RAL 9006)
Material (Housing)	ABS (metal-plated)

Cable/line

External cable diameter	4 mm ... 10 mm (Incoming bus line)

Mechanical properties

Mechanical data

Insertion/withdrawal cycles	> 200
Fixing screws	4-40 UNC
Tightening torque	0.4 Nm

Mechanical tests

Vibration resistance in accordance with EN 60068-2-6/IEC 60068-2-6	Operation: 5g, 10...150 Hz, 2.5 h, in XYZ direction
Shock in accordance with EN 60068-2-27/IEC 60068-2-27	Operation: 15g, 11 ms period, half-sine shock pulse

Environmental and real-life conditions

Ambient conditions

Degree of protection	IP20
Ambient temperature (operation)	-20 °C ... 75 °C
Ambient temperature (storage/transport)	-25 °C ... 80 °C
Altitude	≤ 5000 m (For restrictions, see the manufacturer's declaration for altitude operation)
Permissible humidity (operation)	10 % ... 95 % (non-condensing)
Permissible humidity (storage/transport)	5 % ... 95 % (non-condensing)

Approvals

ATEX

Identification	II 3 G Ex ec IIC T4 Gc
Certificate	PxCIF15ATEX2761499X
Note	Please follow the special installation instructions in the documentation!

UKEX

Identification	II 3 G Ex ec IIC T4 Gc
Certificate	PxCIMA22UKEX2761499X

Corrosive gas test

Identification	ISA-S71.04-1985 G3 Harsh Group A

Standards and regulations

Free from substances that could impair the application of coating	VDMA 24364:2018-05

Drawings

Dimensional drawing

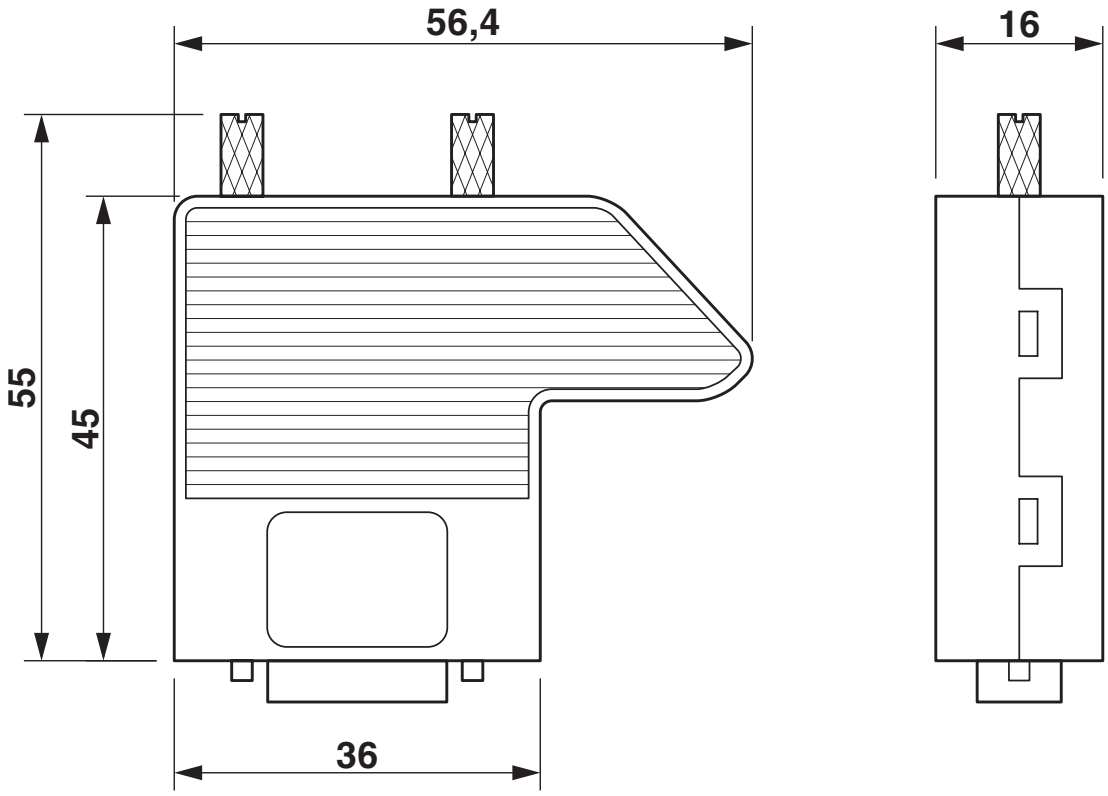

Dimensional drawing

Approvals

To download certificates, visit the product detail page: https://www.phoenixcontact.com/us/products/2761499

CSA
Approval ID: 2437602

cULus Recognized
Approval ID: E238705

Classifications

ECLASS

ECLASS-13.0	27440302
ECLASS-15.0	27440322

ETIM

ETIM 10.0	EC001132

UNSPSC

UNSPSC 21.0	39121400

Environmental product compliance

EU RoHS

Fulfills EU RoHS substance requirements	Yes, No exemptions

China RoHS

Environment friendly use period (EFUP)	EFUP-E
	No hazardous substances above the limits

EU REACH SVHC

REACH candidate substance (CAS No.)	No substance above 0.1 wt%

EF3.1 Climate Change

CO2e kg	0.229 kg CO2e

Phoenix Contact 2026 © - all rights reserved
https://www.phoenixcontact.com

Phoenix Contact USA
586 Fulling Mill Road
Middletown, PA 17057, United States
(+717) 944-1300
info@phoenixcon.com