SUBCON-PLUS-PROFIB/PG - D-SUB bus connector

2744403

https://www.phoenixcontact.com/us/products/2744403

Please be informed that the data shown in this PDF document is generated from our online catalog. Please find the complete data in the user documentation. Our general terms of use for downloads are valid.



D-SUB connector, 9-pos., pin, 35° cable outlet, bus system: PROFIBUS DP up to 12 Mbps with PG D-SUB socket for connecting a programming device, termination resistor can be switched on via slide switch, pin assignment: 3, 5, 6, 8; spring-cage connection terminal blocks

ELEKTROGERÄTE RÜCKNAHME

Commercial data

Item number	2744403
Packing unit	1 pc
Minimum order quantity	1 pc
Sales key	DN10
Product key	DNC531
GTIN	4017918819453
Weight per piece (including packing)	46.1 g
Weight per piece (excluding packing)	43.2 g
Customs tariff number	85366990
Country of origin	DE

Technical data

Notes

Note on application

Note on application	Only for industrial use

Utilization restriction

CCCex note	Use in potentially explosive areas is not permitted in China.

Product properties

Product type	Data plug
MTTF	6706 Years (SN 29500 standard, temperature 25°C, operating cycle 21%)
	1817 Years (SN 29500 standard, temperature 40°C, operating cycle 34.25%)
	155 Years (SN 29500 standard, temperature 40°C, operating cycle 100%)
Pin assignment	3, 5, 6, 8

Electrical properties

Maximum power dissipation for nominal condition	0.025 W
Nominal voltage U_N	5 V
Nominal current I_N	100 mA
Transmission medium	Copper

Connection data

D-SUB connection

Connection method	D-SUB connector

PCB connection

Connection method	Spring-cage connection
Stripping length	9 mm
Conductor cross-section, rigid min.	0.12 mm²
Conductor cross-section, rigid max.	0.5 mm²
Single-wire/terminal point, rigid AWG min.	26
Single-wire/terminal point, rigid AWG max.	20

Programming connection

Connection method	D-SUB socket

Interfaces

Bus system	PROFIBUS DP
Signal	PROFIBUS

Dimensions

Dimensional drawing	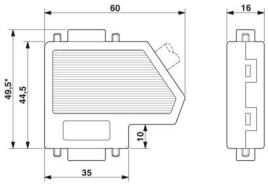
Width	16 mm
Height	49.5 mm
Length	60 mm

Material specifications

Color (Housing)	white aluminium (RAL 9006)
Material (Housing)	ABS (metal-plated)

Cable/line

External cable diameter	7.6 mm ... 8.4 mm (Incoming bus line)

Mechanical properties

Mechanical data

Insertion/withdrawal cycles	> 200
Fixing screws	4-40 UNC
Tightening torque	0.4 Nm

Mechanical tests

Vibration resistance in accordance with EN 60068-2-6/IEC 60068-2-6	Operation: 5g, 10...150 Hz, 2.5 h, in XYZ direction
Shock in accordance with EN 60068-2-27/IEC 60068-2-27	Operation: 15g, 11 ms period, half-sine shock pulse

Environmental and real-life conditions

Ambient conditions

Degree of protection	IP40
Ambient temperature (operation)	-20 °C ... 75 °C
Ambient temperature (storage/transport)	-25 °C ... 80 °C
Altitude	≤ 5000 m (For restrictions, see the manufacturer's declaration for altitude operation)
Permissible humidity (operation)	10 % ... 95 % (non-condensing)
Permissible humidity (storage/transport)	5 % ... 95 % (non-condensing)

Approvals

ATEX

Identification	Ⓔx II 3 G Ex ec IIC T4 Gc
Certificate	PxCIF15ATEX2744348X
Note	Please follow the special installation instructions in the documentation!

UKEX

Identification	Ⓔx II 3 G Ex ec IIC T4 Gc
Certificate	PxCIMA22UKEX2744348X

Corrosive gas test

Identification	ISA-S71.04-1985 G3 Harsh Group A

Standards and regulations

Free from substances that could impair the application of coating	VDMA 24364:2018-05

Drawings

Dimensional drawing

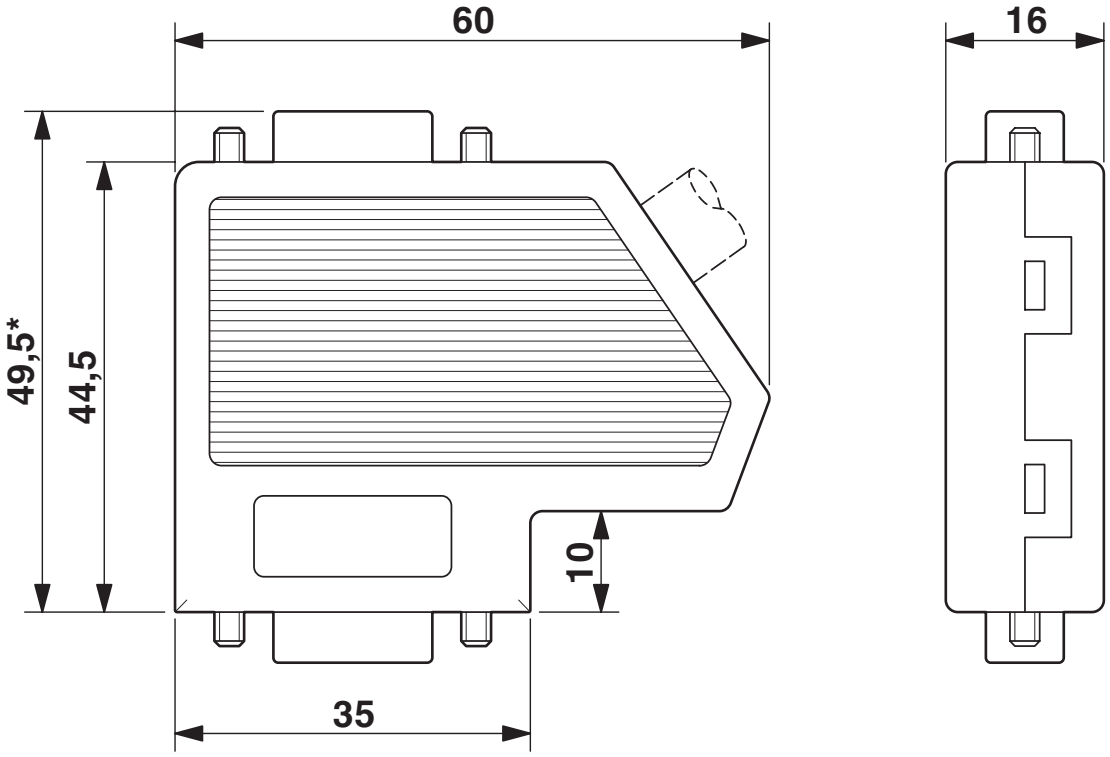

Dimensional drawing

Schematic diagram

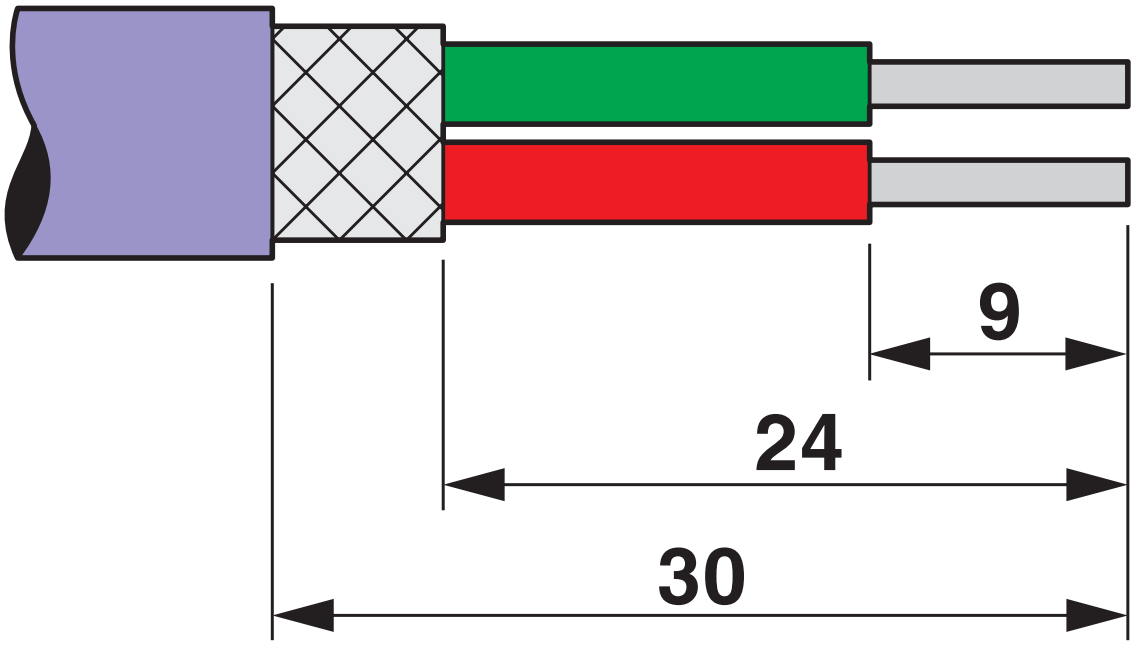

Stripping specifications

Schematic diagram

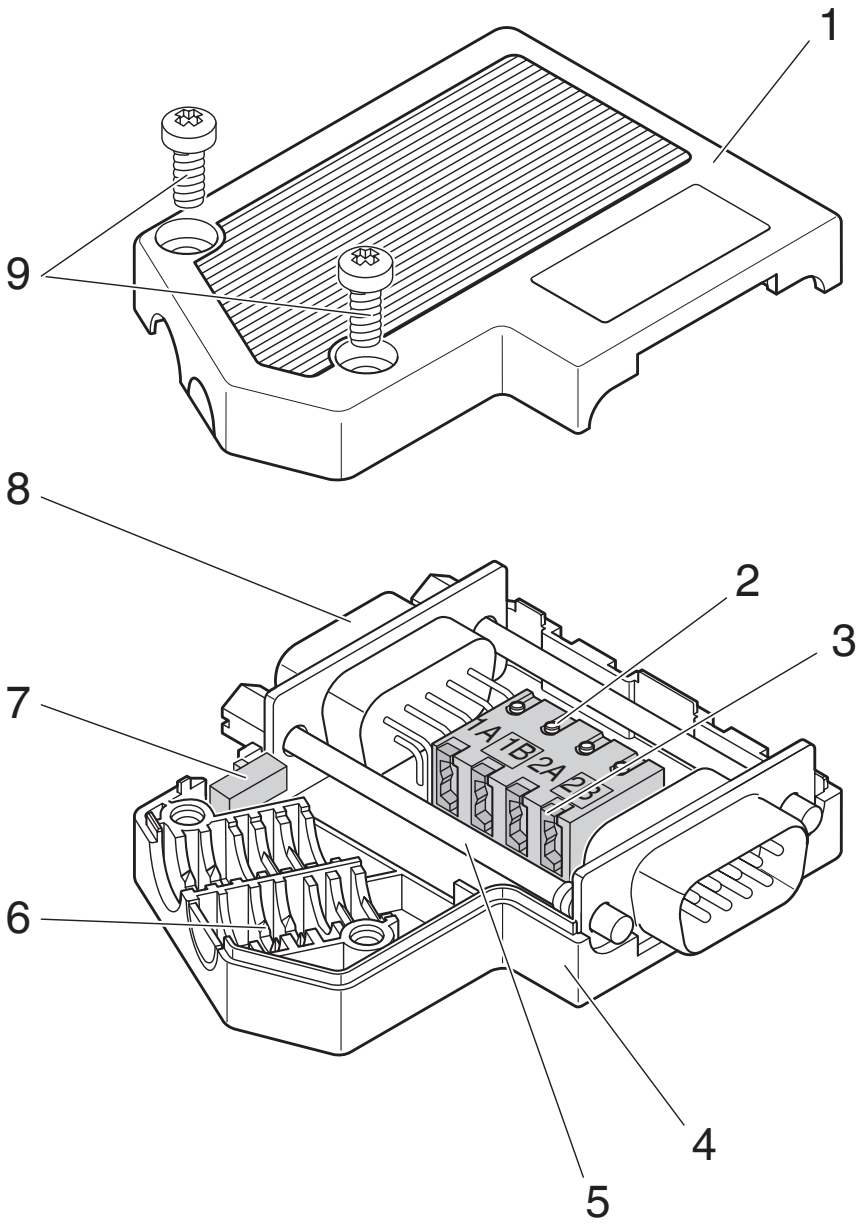

Function elements

Circuit diagram

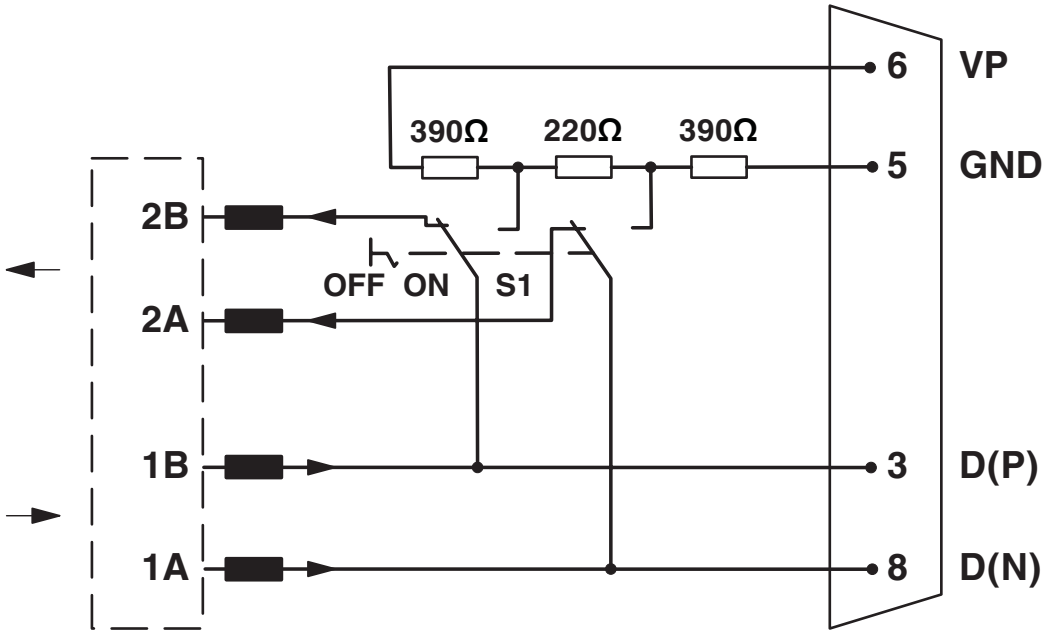

Functional diagram of the connector range
SUBCON-PLUS-PROFIB/...

Approvals

To download certificates, visit the product detail page: https://www.phoenixcontact.com/us/products/2744403

cULus Recognized
Approval ID: E238705

Classifications

ECLASS

ECLASS-13.0	27440302
ECLASS-15.0	27440322

ETIM

ETIM 10.0	EC001132

UNSPSC

UNSPSC 21.0	39121400

Environmental product compliance

EU RoHS

Fulfills EU RoHS substance requirements	Yes
Exemption	6(c)

China RoHS

Environment friendly use period (EFUP)	EFUP-50
	An article-related China RoHS declaration table can be found in the download area for the respective article under "Manufacturer declaration". For all articles with EFUP-E, no China RoHS declaration table issued and required.

EU REACH SVHC

REACH candidate substance (CAS No.)	Lead(CAS: 7439-92-1)
SCIP	b1e097ff-71fd-4eb9-b0ae-6379ed498b85

Phoenix Contact 2026 © - all rights reserved
https://www.phoenixcontact.com

Phoenix Contact USA
586 Fulling Mill Road
Middletown, PA 17057, United States
(+717) 944-1300
info@phoenixcon.com