PSI-MOS-RS232/FO 850 E - FO converters

2708371

https://www.phoenixcontact.com/us/products/2708371

Please be informed that the data shown in this PDF document is generated from our online catalog. Please find the complete data in the user documentation. Our general terms of use for downloads are valid.

CRA-READY



FO converter with integrated optical diagnostics, alarm contact, for RS-232 interfaces up to 115. 2 kbps, terminal device with one FO interface (BFOC), 850 nm, for PCF/fiberglass cable (multimode)

Your advantages

- Supply voltage and data signals routed through the DIN rail connectors
- Connections can be plugged in via a COMBICON screw terminal block
- Redundant power supply possible by means of optional system power supply unit
- High-quality electrical isolation between all interfaces (RS-232 // fiber optic ports // power supply // DIN rail connector)
- Approved for use in zone 2
- Intrinsically safe fiber optic interface (Ex op is) for direct connection to devices in zone 1
- Integrated optical diagnostics for continuous monitoring of FO paths
- Floating switch contact for advance warning of critical FO paths
- Automatic data rate detection for all data rates up to 115.2 kbps
- Shipbuilding approval in accordance with DNV GL

ELEKTROGERÄTE RÜCKNAHME

Commercial data

Item number	2708371

Packing unit	1 pc
Minimum order quantity	1 pc
Sales key	DN06
Product key	DNC215
GTIN	4017918974077
Weight per piece (including packing)	236 g
Weight per piece (excluding packing)	221.1 g
Customs tariff number	85176200
Country of origin	DE

Technical data

Notes

Note on application	Only for industrial use
Note on application	As things stand now, we are preparing the product so that, as of December 11, 2027, it will comply with the requirements of the EU Cyber Resilience Act (CRA) based on the information currently available regarding the CRA.

Utilization restriction

CCCex note	Use in potentially explosive areas is not permitted in China.

Product properties

Product type	Media converter
Product family	PSI-MOS
MTTF	1092 Years (SN 29500 standard, temperature 25°C, operating cycle 21%)
	468 Years (SN 29500 standard, temperature 40°C, operating cycle 34.25%)
	194 Years (SN 29500 standard, temperature 40°C, operating cycle 100%)
MTBF	320 Years (Telcordia standard, 25°C temperature, 21% operating cycle (5 days a week, 8 hours a day))
	48 Years (Telcordia standard, 40°C temperature, 34.25% operating cycle (5 days a week, 12 hours a day))
Special properties	The product is being prepared for compliance with the Cyber Resilience Act (CRA)

Electrical properties

Electrical isolation	VCC // V.24 (RS-232)
Maximum power dissipation for nominal condition	2.88 W
Test voltage data interface/power supply	1.5 kV_{rms} (50 Hz, 1 min.)

Supply

Supply voltage range	18 V DC ... 30 V DC
Nominal supply voltage	24 V DC (in acc. with UL)
Typical current consumption	120 mA (24 V DC)
Max. current consumption	120 mA

Output data

Switching

Output name	Relay output
Output description	Alarm output
Number of outputs	1
Maximum switching voltage	60 V DC
	42 V AC
Limiting continuous current	0.46 A

Connection data

Supply

Connection method	COMBICON plug-in screw terminal block
Tightening torque	0.56 Nm ... 0.79 Nm

Interfaces

Bit distortion, input	± 35 % (permitted)
Bit distortion, output	< 6.25 %
Signal	Modbus
Transmission channels	2 (1/1), RxD, TxD, full duplex

Data: optical FO

No. of channels	1
Transmit capacity, minimum	-4.6 dBm (200/230 µm)
	-17.6 dBm (50/125 µm)
	-13.6 dBm (62,5/125 µm)
Transmission length incl. 3 dB system reserve	2800 m (F-K 200/230 8 dB/km with quick mounting connector)
	4200 m (with F-G 50/125 2.5 dB/km)
	4800 m (with F-G 62,5/125 3.0 dB/km)
Transmission protocol	Transparent to protocol for RS-232 interface
Connection method	B-FOC (ST®)
Wavelength	850 nm
Minimum receiver sensitivity	-33.2 dBm
Transmission medium	PCF fiber
	Multi-mode fiberglass

Data: V.24 (RS-232) interface in acc. with ITU-T V.28, EIA/TIA-232, DIN 66259-1

Serial transmission speed	4.8 Kbps ... 115.2 Kbps
Connection method	D-SUB 9 plug
Transmission length	≤ 15 m
Single conductor/terminal point, rigid	0.2 mm² ... 2.5 mm²
Single-wire/terminal point, flexible	0.2 mm² ... 2.5 mm²
Max. AWG conductor cross-section, flexible	14
Min. AWG conductor cross-section, flexible	24
Single-wire/terminal point, rigid AWG max.	14
Single-wire/terminal point, rigid AWG min.	24
Transmission medium	Copper
File format/coding	UART (11 Bit, NRZ)
Data direction switching	Automatic control

Dimensions

Width	35 mm
Height	99 mm
Depth	105 mm

Material specifications

Color (Housing)	green (RAL 6021)
Material (Housing)	PA 6.6-FR

Cable/line

FO cable

Fiber types	200/230 µm
	50/125 µm
	62.5/125 µm
	PCF fiber
	Fiberglass

Mechanical tests

Vibration resistance in accordance with EN 60068-2-6/IEC 60068-2-6	Operation: 5g, 10...150 Hz, 2.5 h, in XYZ direction
Shock in accordance with EN 60068-2-27/IEC 60068-2-27	Operation: 15g, 11 ms period, half-sine shock pulse

Environmental and real-life conditions

Ambient conditions

Degree of protection	IP20
Ambient temperature (operation)	-20 °C ... 60 °C
Ambient temperature (storage/transport)	-40 °C ... 85 °C
Altitude	≤ 5000 m (For restrictions, see the manufacturer's declaration for altitude operation)
Permissible humidity (operation)	30 % ... 95 % (non-condensing)

Approvals

CE

Certificate	CE-compliant

ATEX

Identification	Ⓔx II 3 G Ex nA nC IIC T4 Gc X
Note	Please follow the special installation instructions in the documentation!

ATEX, FO interface

Identification	Ⓔx II (2) G [Ex op is Gb] IIC
	Ⓔx II (2) D [Ex op is Db] IIIC
Certificate	PTB 06 ATEX 2042 U
Note	Please follow the special installation instructions in the documentation!

UL, USA/Canada

Identification	Class I, Zone 2, AEx nc IIC T5
	Class I, Zone 2, Ex nC nL IIC T5 X

	Class I, Div. 2, Groups A, B, C, D

Corrosive gas test

Identification	ISA-S71.04-1985 G3 Harsh Group A

Shipbuilding

Identification	DNV GL

Shipbuilding data

Temperature	B
Humidity	A
Vibration	A
EMC	B
Enclosure	Required protection according to the Rules shall be provided upon installation on board

EMC data

Electromagnetic compatibility	Conformance with EMC Directive 2014/30/EU
Noise immunity	EN 61000-6-2:2005

Noise emission

Standards/regulations	EN 55011

Electrostatic discharge

Standards/regulations	EN 61000-4-2

Electrostatic discharge

Contact discharge	± 6 kV
Discharge in air	± 8 kV
Comments	Criterion B

Electromagnetic HF field

Standards/regulations	EN 61000-4-3

Electromagnetic HF field

Comments	Criterion A

Fast transients (burst)

Standards/regulations	EN 61000-4-4

Fast transients (burst)

Comments	Criterion B

Surge current load (surge)

Standards/regulations	EN 61000-4-5

Surge current load (surge)

Comments	Criterion B

Conducted interference

Standards/regulations	EN 61000-4-6

Conducted interference

Comments	Criterion A
Voltage	10 V

Emitted interference

Standards/regulations	EN 55011
Comments	Class A, industrial applications

Criteria

Criterion A	Normal operating behavior within the specified limits.
Criterion B	Temporary impairment to operational behavior that is corrected by the device itself.

Standards and regulations

Free from substances that could impair the application of coating	VDMA 24364:2018-05

Mounting

Mounting type	DIN rail mounting

Drawings

Application drawing

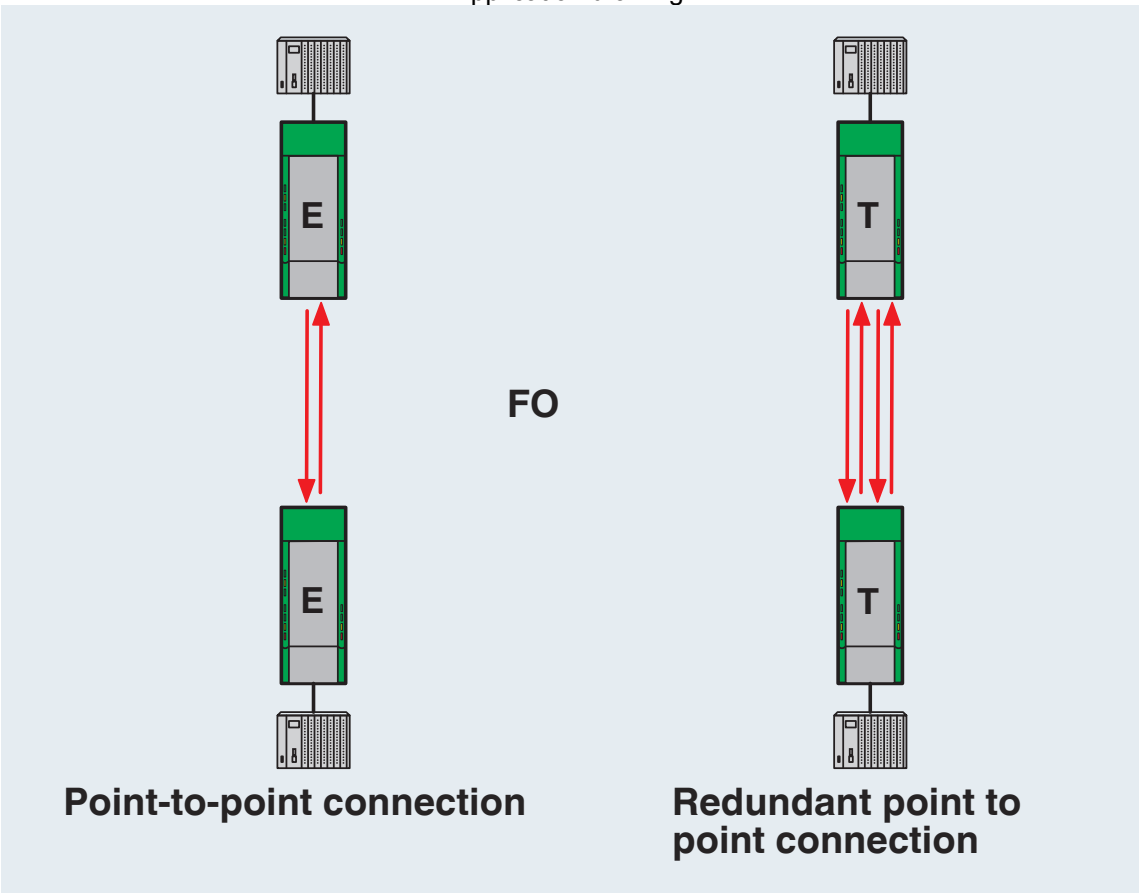

Redundant point-to-point connection

Application drawing

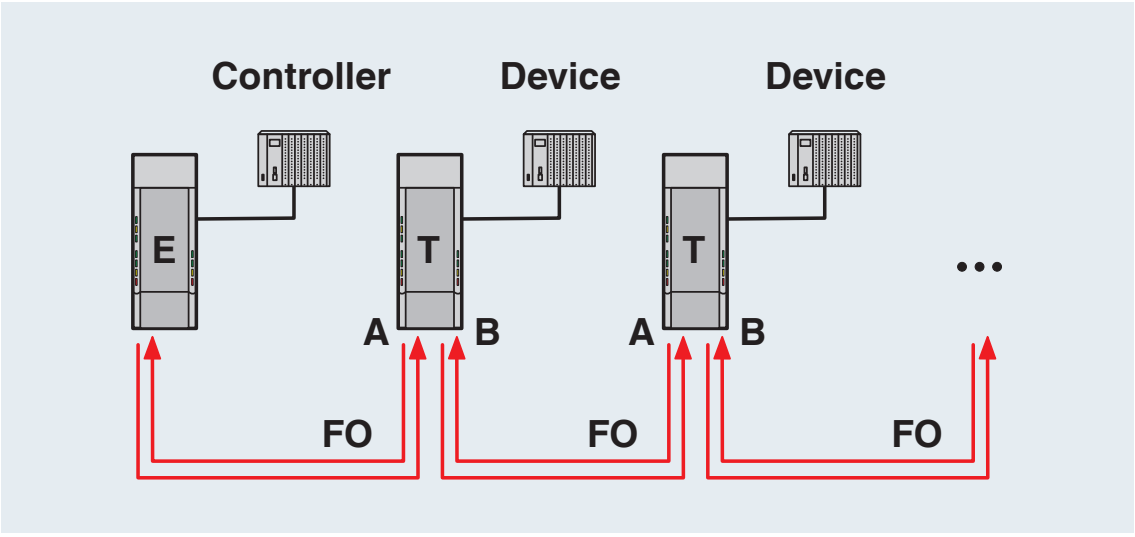

Controller-device line structure

Application drawing

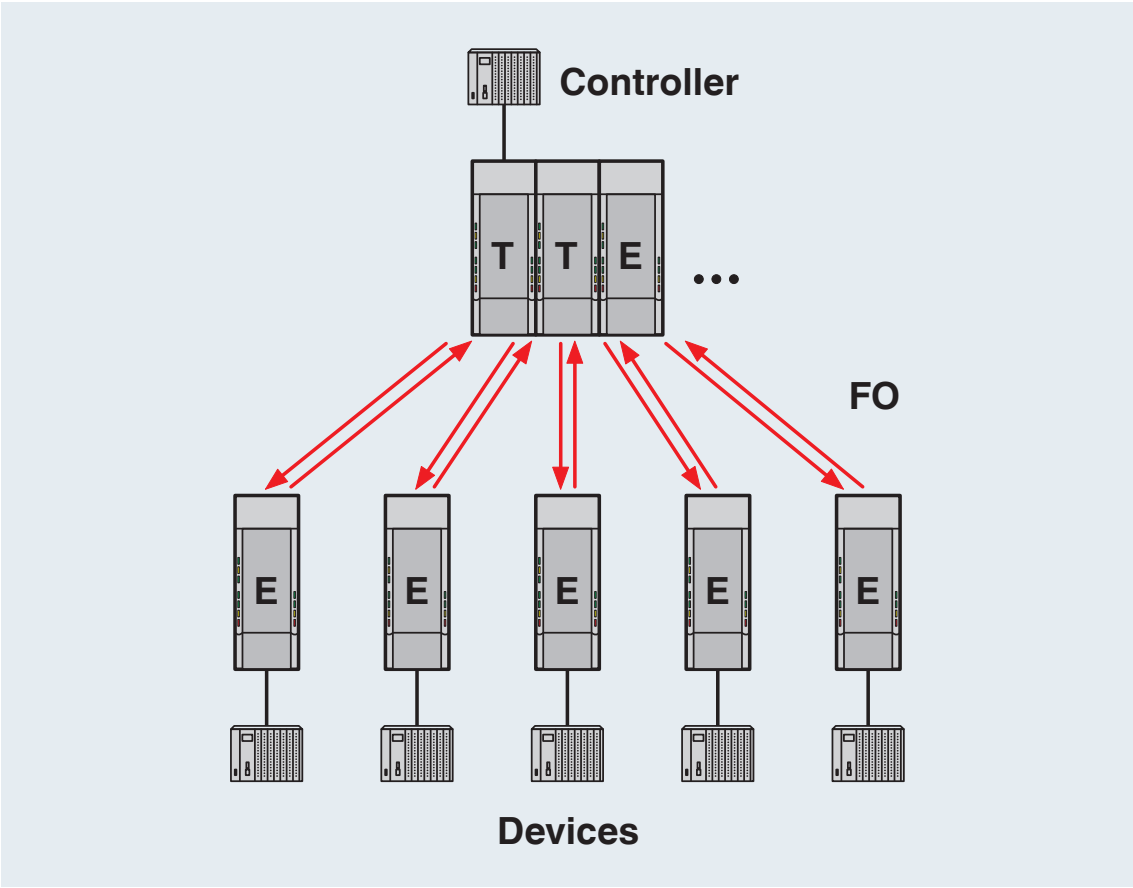

Star structure

Application drawing

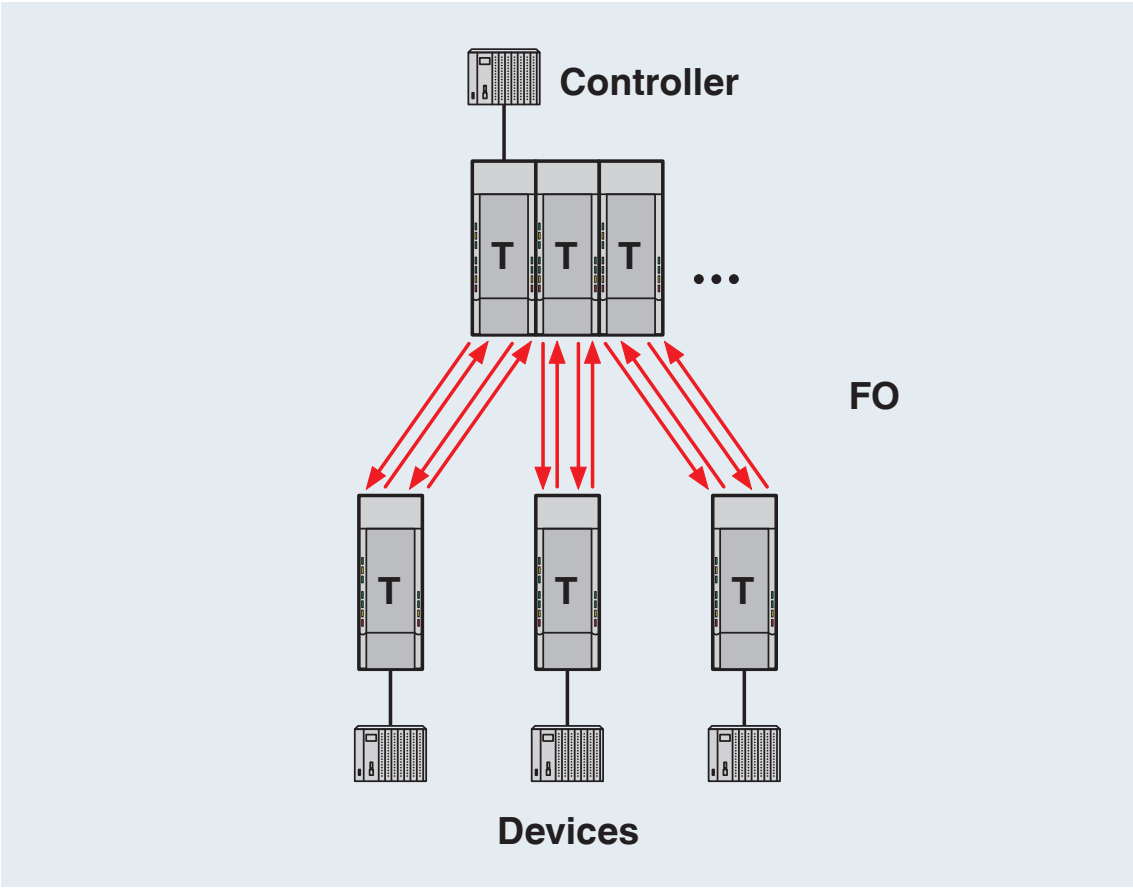

Redundant structure

Schematic diagram

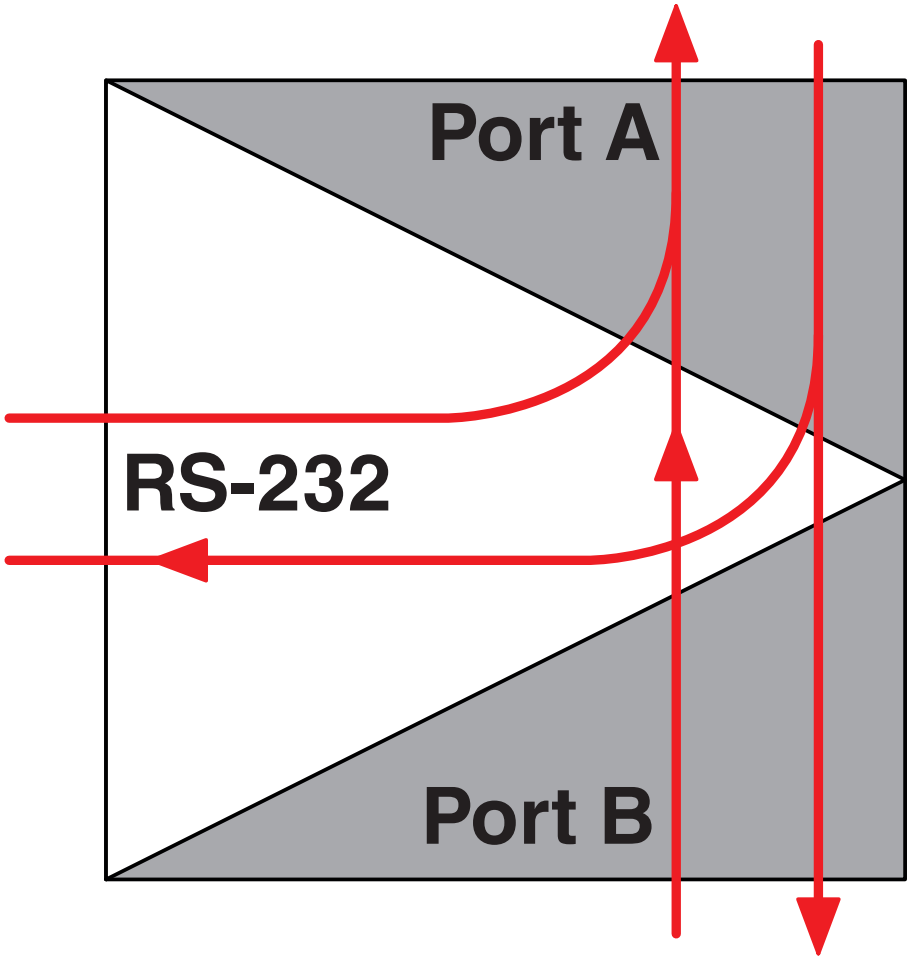

Port assignment in a line structure

Schematic diagram

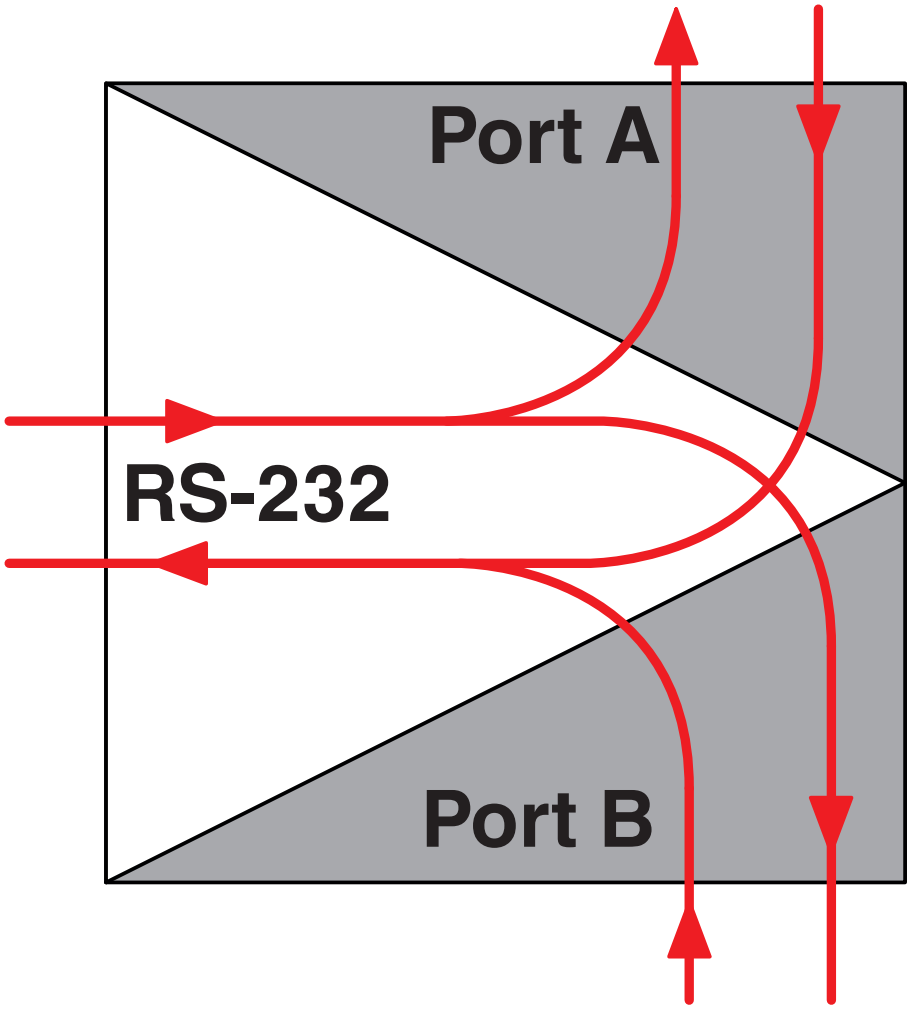

Port assignment in star structures

Block diagram

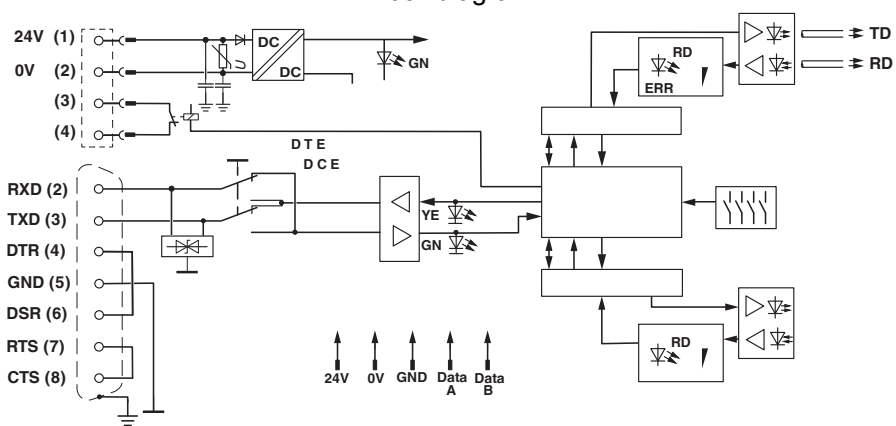

*) only with PSI-MOS.../FO...T

Approvals

To download certificates, visit the product detail page: https://www.phoenixcontact.com/us/products/2708371

cULus Recognized
Approval ID: E238705

DNV GL
Approval ID: TAA00001KR_7

cULus Listed
Approval ID: E199827

Classifications

ECLASS

ECLASS-13.0	19170411
ECLASS-15.0	19170411

ETIM

ETIM 10.0	EC001467

UNSPSC

UNSPSC 21.0	43201500

Environmental product compliance

EU RoHS

Fulfills EU RoHS substance requirements	Yes
Exemption	6(c), 7(a), 7(c)-I

China RoHS

Environment friendly use period (EFUP)	EFUP-50
	An article-related China RoHS declaration table can be found in the download area for the respective article under "Manufacturer declaration". For all articles with EFUP-E, no China RoHS declaration table issued and required.

EU REACH SVHC

REACH candidate substance (CAS No.)	Lead(CAS: 7439-92-1)
SCIP	c5763b83-d871-430b-bd59-b53cb3b35fbe

EF3.1 Climate Change

CO2e kg	14.022 kg CO2e

Phoenix Contact 2026 © - all rights reserved
https://www.phoenixcontact.com

Phoenix Contact USA
586 Fulling Mill Road
Middletown, PA 17057, United States
(+717) 944-1300
info@phoenixcon.com