PSI-MOS-PROFIB/FO 850 T - FO converters

2708261

https://www.phoenixcontact.com/us/products/2708261

Please be informed that the data shown in this PDF document is generated from our online catalog. Please find the complete data in the user documentation. Our general terms of use for downloads are valid.

CRA-READY



FO converter with integrated optical diagnostics, alarm contact, for PROFIBUS up to 12 Mbps, T-coupler with two FO interfaces (BFOC), 850 nm, for PCF/fiberglass cable (multimode)

Product description

The PSI-MOS-PROFIB/FO... devices convert copper-based PROFIBUS interfaces to fiber optics. The integrated optical diagnostics allow permanent monitoring of the FO paths during installation and also during operation. The floating switch contact is activated when the signal output on the fiber optic paths drops to a critical level. The PSI-MOS-PROFIB/FO... T T-couplers allow the interface to be converted for two FO cables. They can be used to create linear structures and ring structures for increased system availability.

Your advantages

- Can be combined with the PSI copper repeater in a modular way using DIN rail connectors
- Supply voltage and data signals routed through the DIN rail connectors
- Connections can be plugged in via a COMBICON screw terminal block
- Automatic data rate detection or fixed data rate setting via DIP switches
- Redundant power supply
- High-quality electrical isolation between all interfaces (PROFIBUS // fiber optic ports // power supply // DIN rail connector)
- Approved for use in zone 2
- Integrated optical diagnostics for continuous monitoring of FO paths
- Intrinsically safe fiber optic interface (Ex op is) for direct connection to devices in zone 1
- Floating switch contact for advance warning of critical FO paths
- Suitable for all data rates up to 12 Mbps
- Bit retiming for any cascading depth
- Shipbuilding approval in accordance with DNV GL

Commercial data

Item number	2708261
Packing unit	1 pc
Minimum order quantity	1 pc
Sales key	DN06
Product key	DNC211
GTIN	4017918973964
Weight per piece (including packing)	269.5 g
Weight per piece (excluding packing)	265.2 g
Customs tariff number	85176200
Country of origin	DE

Technical data

Notes

Note on application	Only for industrial use
Note on application	As things stand now, we are preparing the product so that, as of December 11, 2027, it will comply with the requirements of the EU Cyber Resilience Act (CRA) based on the information currently available regarding the CRA.

Utilization restriction

CCCex note	Use in potentially explosive areas is not permitted in China.

Product properties

Product type	Media converter
Product family	PSI-MOS
MTTF	212 Years (SN 29500 standard, temperature 25°C, operating cycle 21%)
	150 Years (SN 29500 standard, temperature 40°C, operating cycle 34.25%)
	86 Years (SN 29500 standard, temperature 40°C, operating cycle 100%)
MTBF	149 Years (Telcordia standard, 25°C temperature, 21% operating cycle (5 days a week, 8 hours a day))
	24 Years (Telcordia standard, 40°C temperature, 34.25% operating cycle (5 days a week, 12 hours a day))
Special properties	The product is being prepared for compliance with the Cyber Resilience Act (CRA)

Electrical properties

Electrical isolation	VCC // RS-485
Maximum power dissipation for nominal condition	2.88 W
Test voltage data interface/power supply	1.5 kV_{rms} (50 Hz, 1 min.)

Supply

Supply voltage range	18 V DC ... 30 V DC (via pluggable COMBICON screw terminal block)
Nominal supply voltage	24 V DC
Typical current consumption	120 mA (24 V DC)
Max. current consumption	130 mA
	≤ 2 A (For operation in a joining station, via the DIN rail connector)

Output data

Switching

Output name	Relay output
Output description	Alarm output
Number of outputs	1

Maximum switching voltage	60 V DC (Resistive Load, General Load)
	30 V AC (Resistive load)
	42 V AC (peak, resistive load)
Limiting continuous current	0.46 A

Connection data

Supply

Connection method	COMBICON plug-in screw terminal block
Single conductor/terminal point, rigid	0.2 mm² ... 2.5 mm²
Single-wire/terminal point, flexible	0.2 mm² ... 2.5 mm²
Conductor cross-section, flexible [AWG]	24 ... 14
Stripping length	7.00 mm
Tightening torque	0.56 Nm ... 0.79 Nm

Interfaces

Bit distortion, input	± 35 % (permitted)
Bit distortion, output	< 6.25 %
Bit delay	< 1 bit (DIP 7 = OFF, standard operation)
	11 bit (DIP 7 = ON, redundancy operation)
Signal	PROFIBUS

Data: optical FO

No. of channels	2
Transmit capacity, minimum	-4.2 dBm (200/230 µm)
	-17.8 dBm (50/125 µm)
	-14.6 dBm (62,5/125 µm)
Transmission length incl. 3 dB system reserve	2600 m (with F-G 50/125 2.5 dB/km)
	3300 m (with F-G 62,5/125 3.0 dB/km)
	800 m (F-K 200/230 10 dB/km with quick mounting connector)
Transmission protocol	Protocol-transparent to the RS-485 interface
Connection method	B-FOC (ST®)
Wavelength	850 nm
Minimum receiver sensitivity	-30 dBm (50/125 µm)
Maximum receiver sensitivity	-3 dBm (200/230 µm)
Transmission medium	PCF fiber
	Multi-mode fiberglass

Data: PROFIBUS acc. to IEC 61158, RS-485 2-wire, half duplex, automatic control

Serial transmission speed	≤ 12 Mbps
Connection method	D-SUB-9 female connector
Tightening torque	0.4 Nm
Transmission length	≤ 1200 m (depending on the data rate, with shielded, twisted pair data cable)
Single conductor/terminal point, rigid	0.2 mm² ... 2.5 mm²
Single-wire/terminal point, flexible	0.2 mm² ... 2.5 mm²

Max. AWG conductor cross-section, flexible	14
Min. AWG conductor cross-section, flexible	24
Single-wire/terminal point, rigid AWG max.	14
Single-wire/terminal point, rigid AWG min.	24
Transmission medium	Copper
File format/coding	UART (11 Bit, NRZ)
Data direction switching	Automatic control
Output nominal voltage	5 V ±0.25 (50 mA)

Dimensions

Width	35 mm
Height	99 mm
Depth	106 mm

Material specifications

Color (Housing)	green (RAL 6021)
Material (Housing)	PA 6.6-FR

Cable/line

FO cable

Fiber types	50/125 µm
	62.5/125 µm
	Fiberglass

Mechanical tests

Vibration resistance in accordance with EN 60068-2-6/IEC 60068-2-6	Operation: 5g, 10...150 Hz, 2.5 h, in XYZ direction
Shock in accordance with EN 60068-2-27/IEC 60068-2-27	Operation: 15g, 11 ms period, half-sine shock pulse
Free fall in accordance with IEC 60068-2-32	Free fall: 1 m

Environmental and real-life conditions

Ambient conditions

Degree of protection	IP20
Ambient temperature (operation)	-20 °C ... 60 °C
Ambient temperature (storage/transport)	-40 °C ... 85 °C
Altitude	≤ 5000 m (For restrictions, see the manufacturer's declaration for altitude operation)
	≤ 2000 m (Hazardous locations)
Permissible humidity (operation)	30 % ... 95 % (non-condensing)

Approvals

CE

Certificate	CE-compliant

ATEX

Identification	II 3(2)G Ex ec nC [op is Gb] IIC T4 Gc
	II(2)D [Ex op is Db] IIIC
Certificate	UL 24 ATEX 3196X
Note	Please follow the special installation instructions in the documentation!

IECEx

Identification	Ex ec nC [op is Gb] IIC T4 Gc
	[Ex op is Db] IIIC
Certificate	IECEx ULD 24.0008X

UL, USA/Canada

Identification	Class I, Zone 2, AEx nc IIC T5
	Class I, Zone 2, Ex nC nL IIC T5 X
	Class I, Div. 2, Groups A, B, C, D

KC approval for South Korea

Certificate	MSIP-REI-PCK-2708261

PROFIBUS interoperability

Note	Tested by independent PNO test laboratory (PN059-485-01)

ABB certification

Identification	Industrial^{IT} enabled
Note	This certification is a trademark of ABB.

Corrosive gas test

Identification	ISA-S71.04-1985 G3 Harsh Group A

Shipbuilding

Identification	DNV GL

Shipbuilding data

Temperature	B
Humidity	A
Vibration	A
EMC	B
Enclosure	Required protection according to the Rules shall be provided upon installation on board

EMC data

Electromagnetic compatibility	Conformance with EMC Directive 2014/30/EU
Noise immunity	EN 61000-6-2:2005

Noise emission

Standards/regulations	EN 55011

Electrostatic discharge

Standards/regulations	EN 61000-4-2

Electrostatic discharge

Contact discharge	± 6 kV
Discharge in air	± 8 kV
Comments	Criterion B

Electromagnetic HF field

Standards/regulations	EN 61000-4-3

Electromagnetic HF field

Field intensity	10 V/m
Comments	Criterion A

Fast transients (burst)

Standards/regulations	EN 61000-4-4

Fast transients (burst)

Input	± 2 kV
Signal	± 2 kV
Comments	Criterion B

Surge current load (surge)

Standards/regulations	EN 61000-4-5

Surge current load (surge)

Input	± 0.5 kV
Signal	± 1 kV
Comments	Criterion B

Conducted interference

Standards/regulations	EN 61000-4-6

Conducted interference

Comments	Criterion A
Voltage	10 V

Emitted interference

Standards/regulations	EN 55011
Comments	Class A, industrial applications

Criteria

Criterion A	Normal operating behavior within the specified limits.
Criterion B	Temporary impairment to operational behavior that is corrected by the device itself.

Standards and regulations

Free from substances that could impair the application of coating	VDMA 24364:2018-05

Air clearances and creepage distances

Standards/regulations	DIN EN 60664-1
	VDE 0110-1
	DIN EN 50178
	EN 60950

Mounting

Mounting type	DIN rail mounting
Assembly note	The product can be snapped onto all 35 mm DIN rails in accordance with EN/IEC 60715.

Drawings

Application drawing

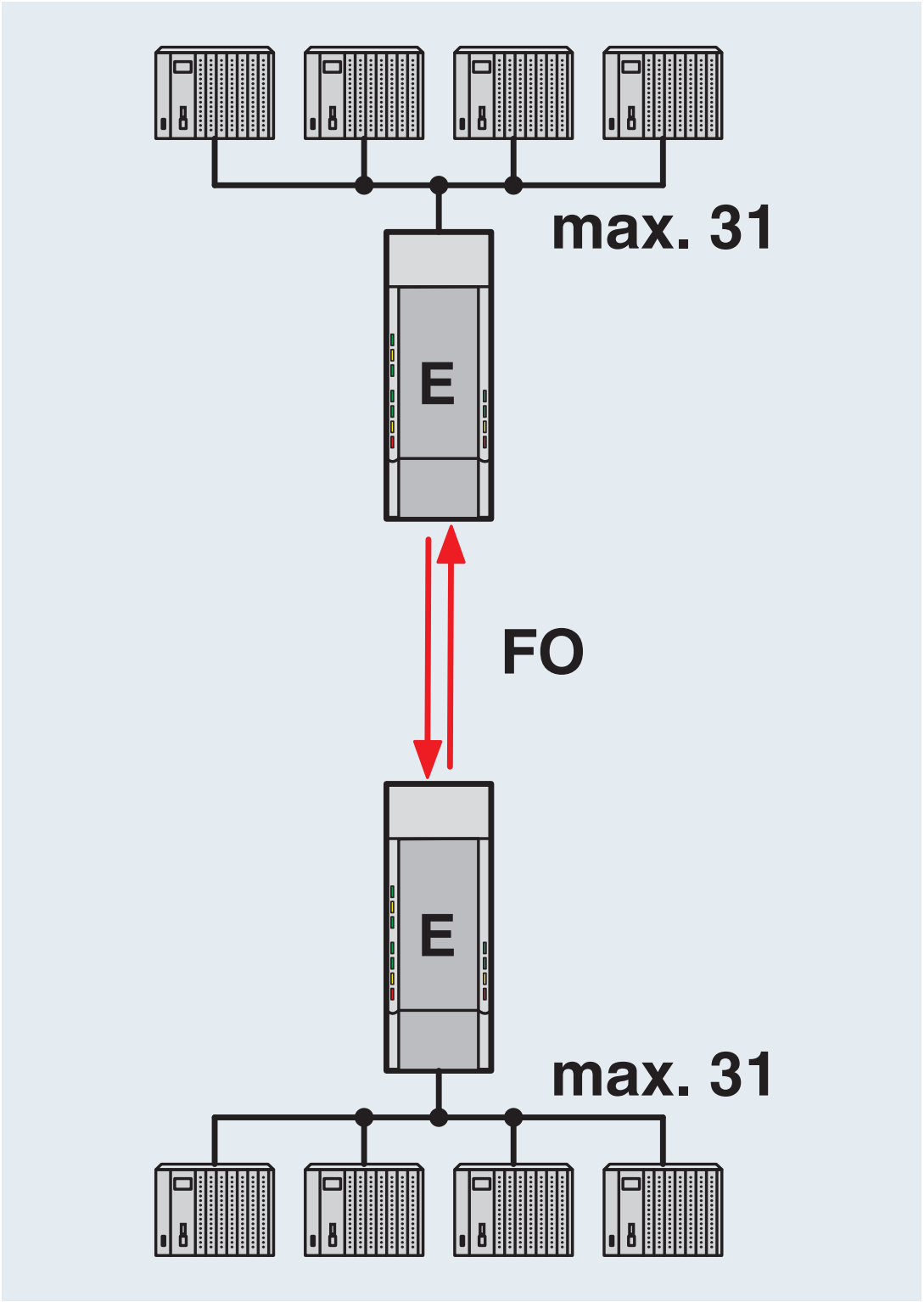

Point-to-point connection

Application drawing

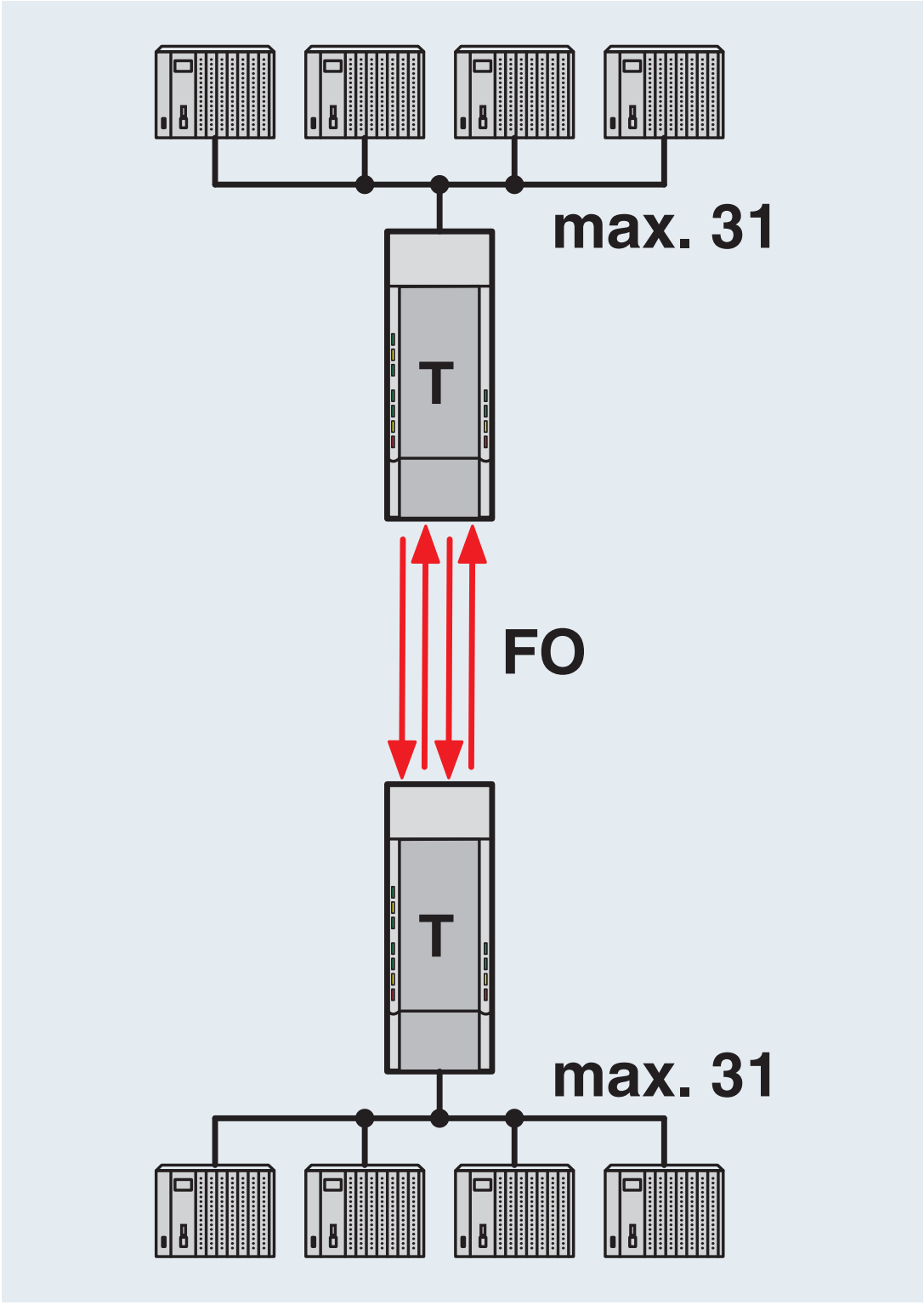

Redundant point-to-point connection

Application drawing

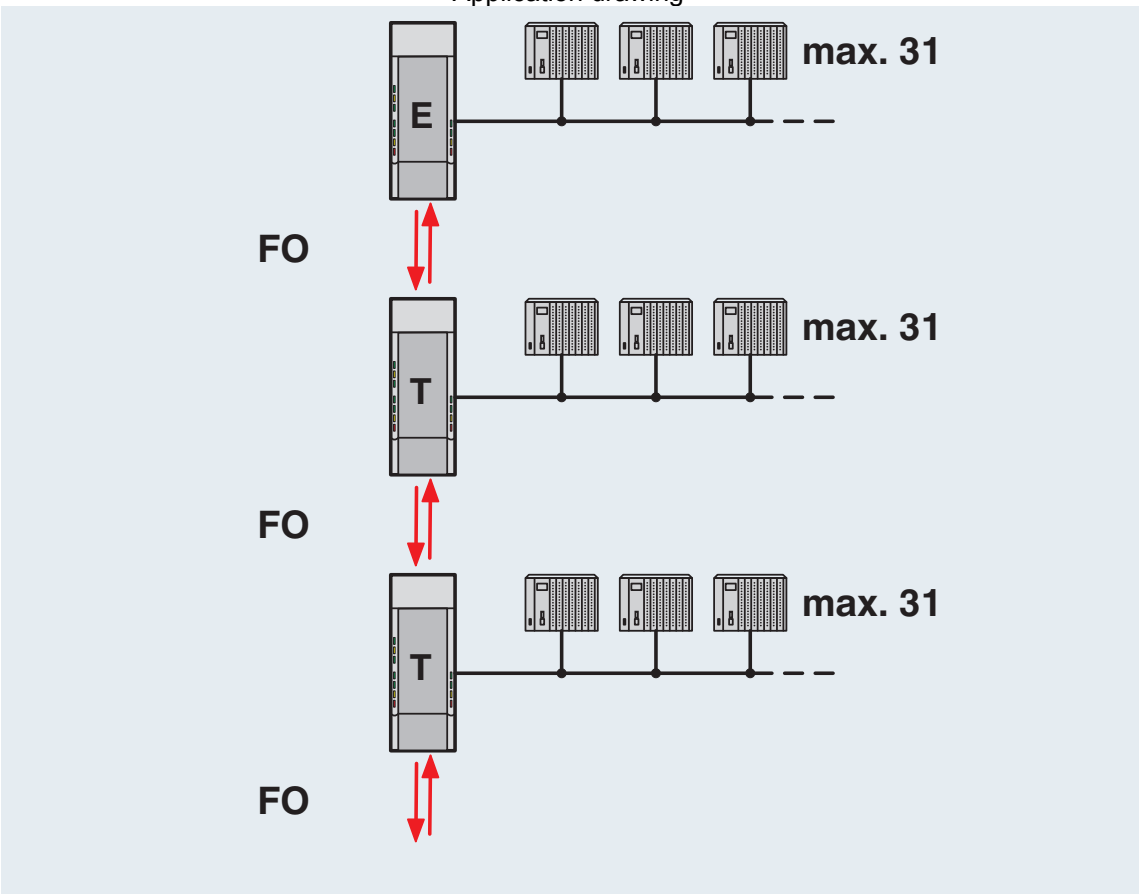

Line structure

Application drawing

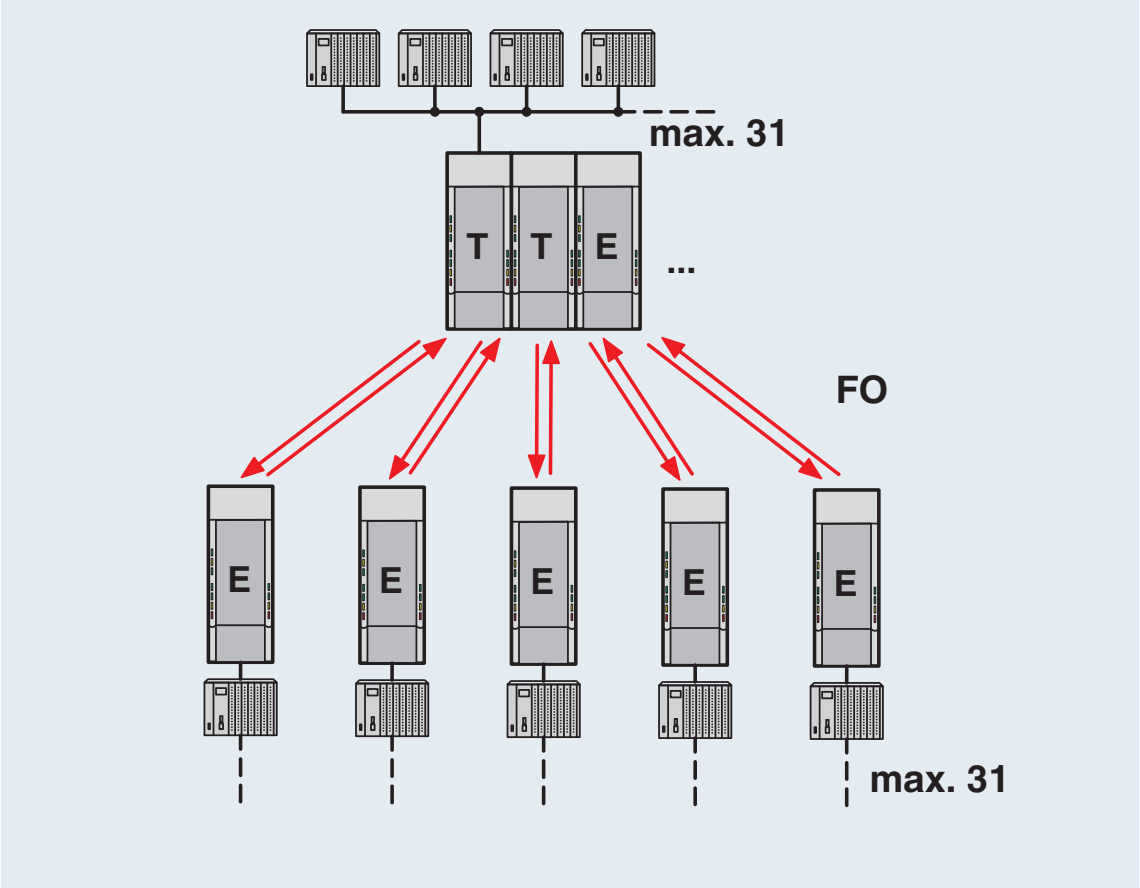

Star structure

Application drawing

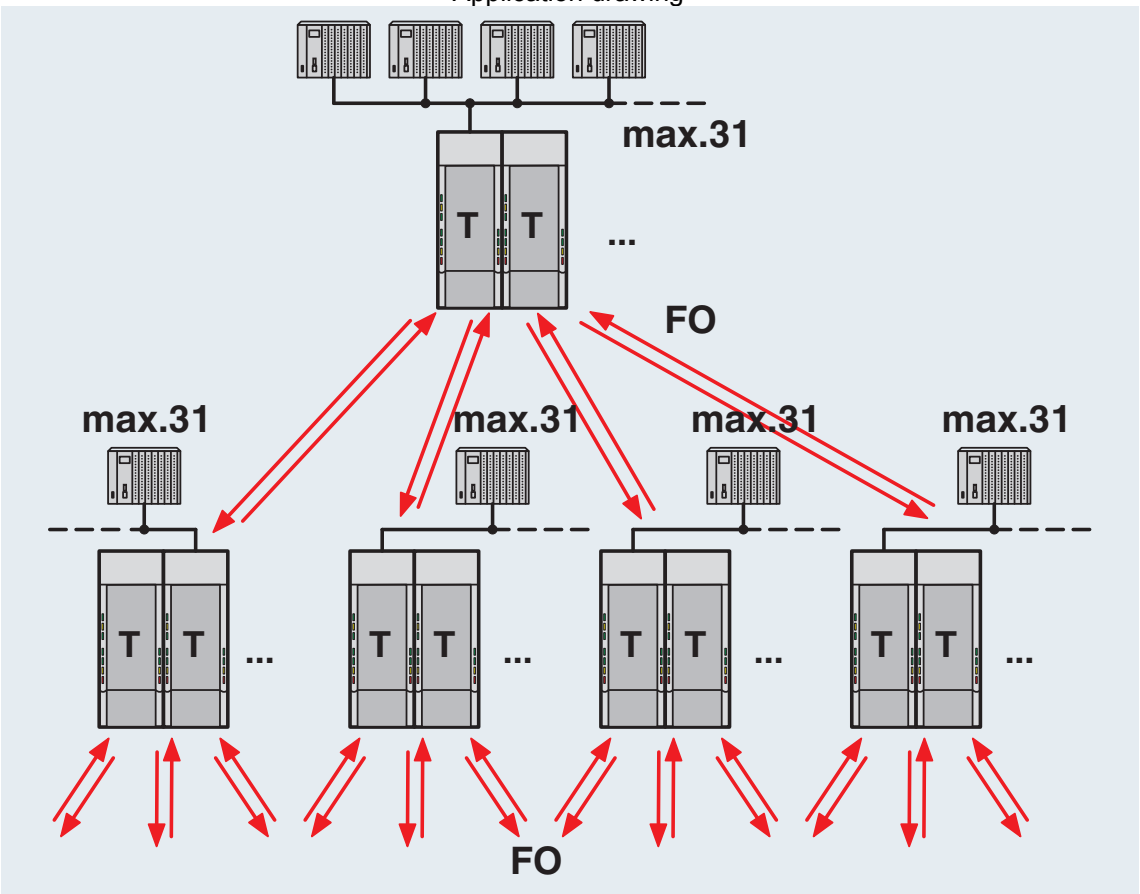

Tree structure

Application drawing

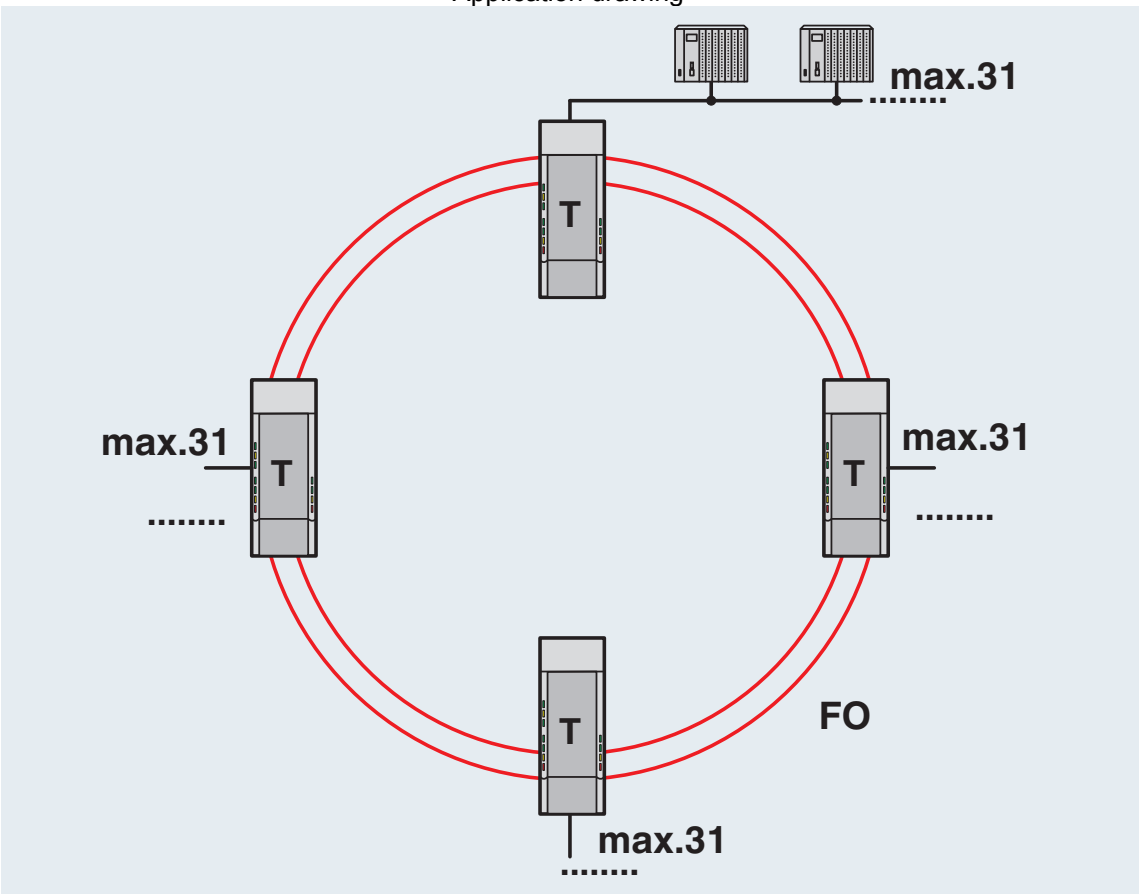

Redundant FO ring

Block diagram

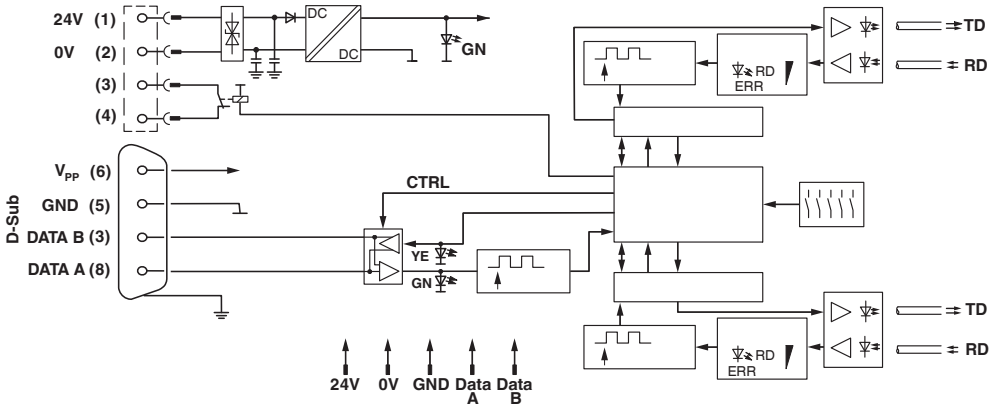

*) only with PSI-MOS.../FO...T

Approvals

To download certificates, visit the product detail page: https://www.phoenixcontact.com/us/products/2708261

KC
Approval ID: MSIP-REI-PCK-2708261

cULus Recognized
Approval ID: E238705

DNV GL
Approval ID: TAA00001KR_7

IECEx
Approval ID: IECEx ULD 24.0008X

ATEX
Approval ID: UL 24 ATEX 3196X

cULus Listed
Approval ID: E199827

Classifications

ECLASS

ECLASS-13.0	19170411
ECLASS-15.0	19170411

ETIM

ETIM 10.0	EC001467

UNSPSC

UNSPSC 21.0	43223323

Environmental product compliance

EU RoHS

Fulfills EU RoHS substance requirements	Yes
Exemption	6(c), 7(a), 7(c)-I

China RoHS

Environment friendly use period (EFUP)	EFUP-50
	An article-related China RoHS declaration table can be found in the download area for the respective article under "Manufacturer declaration". For all articles with EFUP-E, no China RoHS declaration table issued and required.

EU REACH SVHC

REACH candidate substance (CAS No.)	Lead(CAS: 7439-92-1)
SCIP	e3161f42-3179-43da-a39c-b73c509802aa

Phoenix Contact 2026 © - all rights reserved
https://www.phoenixcontact.com

Phoenix Contact USA
586 Fulling Mill Road
Middletown, PA 17057, United States
(+717) 944-1300
info@phoenixcon.com