IL PN BK DI8 DO4 2TX-PAC - Bus coupler

2703994

https://www.phoenixcontact.com/us/products/2703994

Please be informed that the data shown in this PDF document is generated from our online catalog. Please find the complete data in the user documentation. Our general terms of use for downloads are valid.



Inline, Bus coupler, PROFINET, RJ45 jack, Digital inputs: 8, 24 V DC, connection technology: 3-conductor, Digital outputs: 4, 24 V DC, 500 mA, connection technology: 3-conductor, transmission speed in the local bus: 500 kbps / 2 Mbps, degree of protection: IP20

Product description

The bus coupler with integrated I/Os is intended for use within a PROFINET network and represents the link to the Inline I/O system. Up to 61 Inline devices can be connected to the bus coupler. The bus coupler supports a maximum of 16 PCP devices.

Your advantages

- 2x Ethernet twisted pair according to 802.3 with auto negotiation and auto crossover
- Transmission speeds 100 Mbps
- IP parameter setting via PROFINET controller
- Connection to the PROFINET network via 8-pos. RJ45 jack
- Electrical isolation between Ethernet interface and logic
- Ethernet TCP/IP (100 Base-TX, management via SNMP)
- Connection of up to 61 other Inline devices
- Connection of a maximum of 16 PCP devices
- Supported protocols: SNMPv1, TFTP, PROFINET, LLDP, ICMP, and MRP (from firmware 3.21)
- PROFINET IRT (firmware 4.00 or later)
- Conformance with PROFINET specification V2.3 (firmware 4.00 or later)
- PROFINET Netload Class III (from firmware 4.00)
- 8 digital inputs, 4 digital outputs (on-board)
- Automatic detection of the transmission speed in the local bus (500 kbps or 2 Mbps)
- Approved for PROFIsafe applications

ELEKTROGERÄTE RÜCKNAHME

Commercial data

Item number	2703994
Packing unit	1 pc
Minimum order quantity	1 pc
Sales key	DR01
Product key	DRI11A
GTIN	4046356041164
Weight per piece (including packing)	331 g
Weight per piece (excluding packing)	335.7 g
Customs tariff number	85176200
Country of origin	DE

Technical data

Dimensions

Dimensional drawing	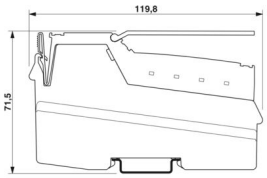
Width	80 mm
Height	119.8 mm
Depth	71.5 mm
Note on dimensions	Specfications with connectors

Notes

Note on application

Note on application	Only for industrial use

Utilization restriction

CCCex note	Use in potentially explosive areas is not permitted in China.

Mounting

Mounting type	DIN rail mounting

Material specifications

Color (Housing)	green (RAL 6021)

Interfaces

Supported protocols	PROFINET
	TFTP
	LLDP
	ICMP
	SNMPv1
	MRP (firmware 3.21 or later)

PROFINET

Number of interfaces	2
Connection method	RJ45 jack
Note on the connection method	Auto negotiation and autocrossing
Transmission speed	100 Mbps (acc. to PROFINET standard)
Transmission physics	Ethernet in RJ45 twisted pair

Inline local bus

Connection method	Inline data jumper

Transmission speed	500 kbps / 2 Mbps (automatic detection, no combined system)

System properties

System limits

Amount of process data (Input data)	max. 244 Byte
Amount of process data (Output data)	max. 244 Byte
Number of supported devices	max. 63 (per station)
Number of local bus devices that can be connected	max. 61 (The on-board I/Os are two devices)
Number of devices with parameter channel	max. 16
Number of supported branch terminals with remote bus branch	0

PROFINET

Device function	PROFINET device
Update rate	min. 1 ms (depending on the size of the bus system)

Programming data

Input address area	8 bit
Output address area	4 bit
Register length (bus)	16 bit
Register length (master)	512 Byte

Input data

Digital:

Input name	Digital inputs
Description of the input	EN 61131-2 type 1
Number of inputs	8
Connection method	Inline connector
Connection technology	3-conductor
Input voltage	24 V DC
Input voltage range "0" signal	-30 V DC ... 5 V DC
Input voltage range "1" signal	15 V DC ... 30 V DC
Nominal input voltage U_{IN}	24 V DC
Nominal input current at U_{IN}	typ. 3 mA
Current flow	Limited to 3 mA, maximum
Permissible conductor length to the sensor	100 m
Typical input current per channel	typ. 3 mA
Typical response time	approx. 500 µs
Filter time	3 ms
Delay at signal change from 0 to 1	5 ms
Delay at signal change from 1 to 0	5 ms

Output data

Digital:

Output name	Digital outputs

Connection method	Inline connector
Connection technology	3-conductor
Number of outputs	4
Protective circuit	Short-circuit and overload protection; Freewheeling circuit in the output driver
Output voltage	24 V DC -1 V (At nominal current)
Limitation of the voltage induced on circuit interruption	approx. -30 V
Max. current carrying capacity per output	max. 500 mA
Maximum output current per module	max. 2 A
Nominal output voltage	24 V DC
Output current when switched off	max. 10 µA (When not loaded, a voltage can be measured even at an output that is not set.)
Nominal load, inductive	12 VA (1.2 H, 48 Ω)
Nominal load, lamp	12 W
Nominal load, ohmic	12 W
Signal delay when switching off an ohmic nominal load	max. 250 µs (in the case of 0.5 A load)
Signal delay when switching on an ohmic nominal load	max. 50 µs (in the case of 0.5 A load)
Maximum operating frequency with inductive nominal load	0.5 Hz (1.2 H, 48 Ω)
Reaction time with short-circuit	1,2 ms
Behavior with overload	Auto restart
Behavior with inductive overload	Output can be destroyed
Behavior at voltage switch-off	The output follows the power supply without delay
Reverse voltage resistance to short pulses	Reverse voltage proof
Resistance to permanent reverse voltage	max. 2 A
Signal delay	typ. 1.2 ms
Overcurrent shut-down	min. 0.7 A

Product properties

Product type	I/O component
Product family	Inline
Type	modular
No. of channels	12
Diagnostics messages	Short-circuit or overload of the digital outputs yes
	Sensor supply failure yes
	Failure of the actuator supply yes

Insulation characteristics

Overvoltage category	II (IEC 60664-1, EN 60664-1)
Pollution degree	2 (IEC 60664-1, EN 60664-1)

Electrical properties

Maximum power dissipation for nominal condition	4.6 W

Potentials

Protective circuit	Surge protection (segment supply, main supply, bus coupler supply); Suppressor diode, 35 V DC

	Reverse polarity protection (segment supply, main supply, bus coupler supply); Suppressor diode, 35 V DC

Potentials: Bus coupler supply U_{BK}; Communications power U_L (7.5 V) and the analog supply U_{ANA} (24 V) are generated from the bus coupler supply.

Supply voltage	24 V DC (via Inline connector)
Supply voltage range	19.2 V DC ... 30 V DC (including all tolerances, including ripple)
Current draw	max. 0.91 A (with max. number of connected I/O terminal blocks)
	typ. 138 mA

Potentials: Communications power (U_L)

Supply voltage	7.5 V DC
Power supply	max. 0.8 A DC (observe derating)

Potentials: Supply of analog modules (U_{ANA})

Supply voltage	24 V DC
Supply voltage range	19.2 V DC ... 30 V DC (including all tolerances, including ripple)
Power supply	max. 0.5 A DC (observe derating)

Potentials: Main circuit supply (U_M)

Supply voltage	24 V DC (via Inline connector)
Supply voltage range	19.2 V DC ... 30 V DC (including all tolerances, including ripple)
Power supply	max. 8 A DC (sum of U_M + U_S)
Current draw	max. 8 A DC
	min. 3 mA (without connected peripherals)

Potentials: Segment circuit supply (U_S)

Supply voltage	24 V DC (via Inline connector)
Supply voltage range	19.2 V DC ... 30 V DC (including all tolerances, including ripple)
Power supply	max. 8 A DC (sum of U_M + U_S)
Current draw	max. 8 A DC
	min. 3 mA (without connected peripherals)

Electrical isolation/isolation of the voltage ranges

Test voltage: PROFINET interface 1 / PROFINET interface 2	500 V AC, 50 Hz, 1 min
Test voltage: PROFINET interface 1 / communications power (U_{BK}, U_L, U_{ANA})	500 V AC, 50 Hz, 1 min
Test voltage: PROFINET interface 1 / I/O (U_M, U_S)	500 V AC, 50 Hz, 1 min
Test voltage: PROFINET interface 1 / functional ground	500 V AC, 50 Hz, 1 min
Test voltage: PROFINET interface 2 / communications power (U_{BK}, U_L, U_{ANA})	500 V AC, 50 Hz, 1 min
Test voltage: PROFINET interface 2 / I/O (U_M, U_S)	500 V AC, 50 Hz, 1 min
Test voltage: PROFINET interface 2 / functional ground	500 V AC, 50 Hz, 1 min
Test voltage: Communications power (U_{BK}, U_L, U_{ANA}) / I/O (U_M, U_S)	500 V AC, 50 Hz, 1 min
Test voltage: Communications power (U_{BK}, U_L, U_{ANA}) / functional ground	500 V AC, 50 Hz, 1 min
Test voltage: I/O (U_M, U_S) / functional ground	500 V AC, 50 Hz, 1 min

Connection data

Connection technology

Connection name	Inline connector

Inline connector

Connection method	Spring-cage connection
Conductor cross-section, rigid	0.08 mm² ... 1.5 mm²
Conductor cross-section, flexible	0.08 mm² ... 1.5 mm²
Conductor cross-section AWG	28 ... 16
Stripping length	8 mm

Environmental and real-life conditions

Ambient conditions

Ambient temperature (operation)	-25 °C ... 55 °C (observe derating)
Degree of protection	IP20
Air pressure (operation)	70 kPa ... 106 kPa (up to 3000 m above sea level)
Air pressure (storage/transport)	70 kPa ... 106 kPa (up to 3000 m above sea level)
Ambient temperature (storage/transport)	-40 °C ... 85 °C
Permissible humidity (operation)	10 % ... 95 % (non-condensing)
Permissible humidity (storage/transport)	10 % ... 95 % (non-condensing)

Mechanical test

Vibration resistance in accordance with EN 60068-2-6/IEC 60068-2-6	5g
Shock in accordance with EN 60068-2-27/IEC 60068-2-27	25g

Standards and regulations

Protection class	III (IEC 61140, EN 61140, VDE 0140-1)

Drawings

Dimensional drawing

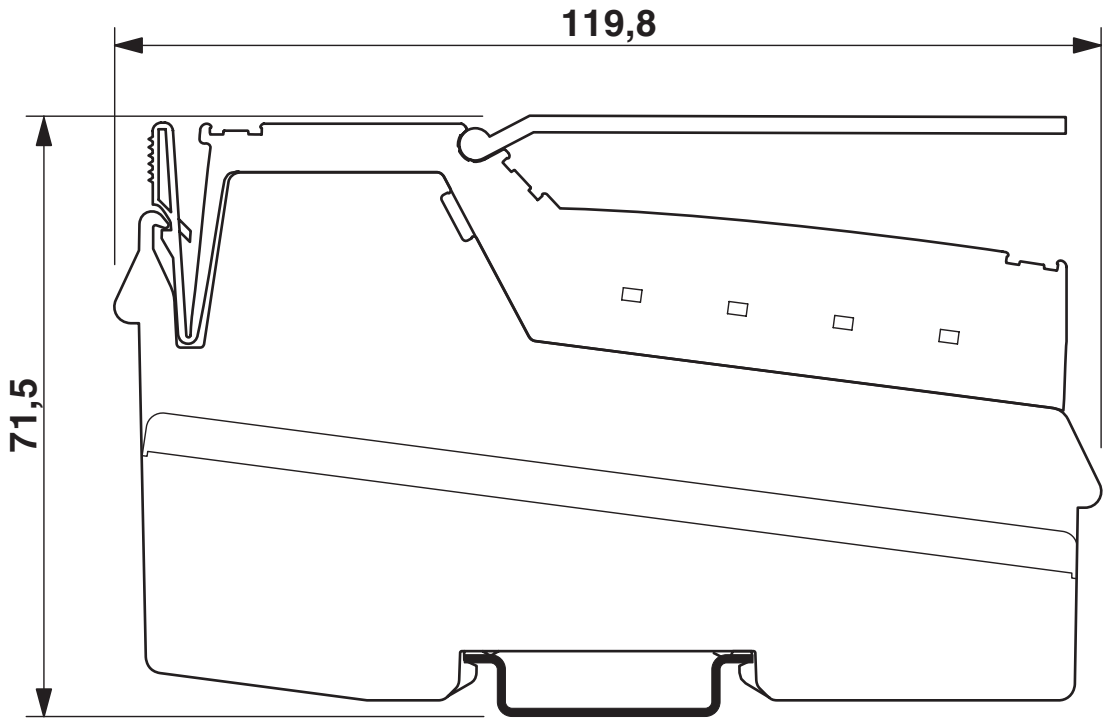

Connection diagram

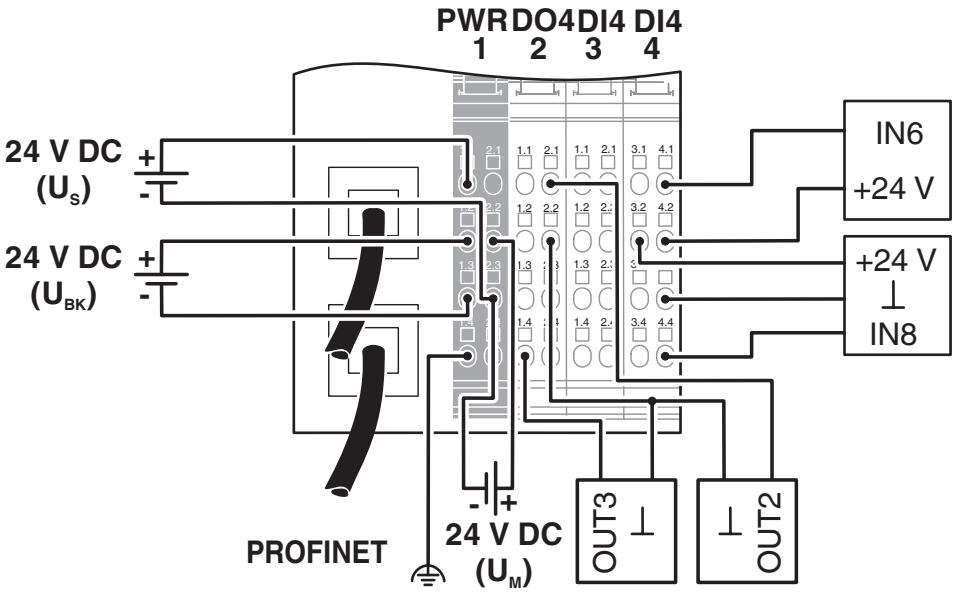

Diagram

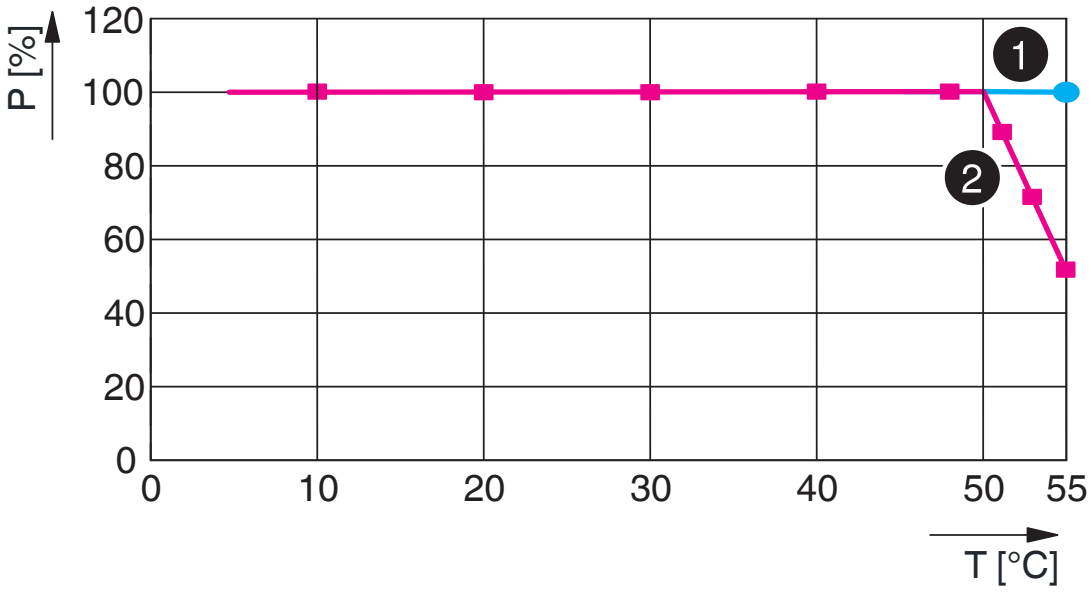

Derating for different mounting positions
1 - Mounting on a horizontal DIN rail
2 - Other mounting positions
P [%] Power dissipation as a percentage
T [°C] Temperature in °C

Approvals

To download certificates, visit the product detail page: https://www.phoenixcontact.com/us/products/2703994

RINA
Approval ID: ELE121121XG

ABS
Approval ID: 22-2226444-PDA

PROFINET
Approval ID: Z10506

cULus Listed
Approval ID: E140324

BV
Approval ID: 20989_C1 BV

cULus Listed
Approval ID: E199827

Classifications

ECLASS

ECLASS-13.0	27242608
ECLASS-15.0	27242608

ETIM

ETIM 10.0	EC001604

UNSPSC

UNSPSC 21.0	32151600

Environmental product compliance

EU RoHS

Fulfills EU RoHS substance requirements	Yes
Exemption	7(a), 7(a)-I, 7(c)-I

China RoHS

Environment friendly use period (EFUP)	EFUP-50
	An article-related China RoHS declaration table can be found in the download area for the respective article under "Manufacturer declaration". For all articles with EFUP-E, no China RoHS declaration table issued and required.

EU REACH SVHC

REACH candidate substance (CAS No.)	Lead(CAS: 7439-92-1)
SCIP	ad0c7e4a-f3b0-4bbf-9667-399c1f5acb09

Phoenix Contact 2026 © - all rights reserved
https://www.phoenixcontact.com

Phoenix Contact USA
586 Fulling Mill Road
Middletown, PA 17057, United States
(+717) 944-1300
info@phoenixcon.com