PP-RJ-SCC - Patch panel

2703018

https://www.phoenixcontact.com/us/products/2703018

Please be informed that the data shown in this PDF document is generated from our online catalog. Please find the complete data in the user documentation. Our general terms of use for downloads are valid.



View from above right, cover open

Patch panel, RJ45 jack on Push-in terminal blocks, CAT5e, 10/100/1000 Mbps, DIN rail adapter, IP20, shield contacting with strain relief

Product description

This product is the successor to FL-PP-RJ45-SCC, item no. 2901642. Ethernet patch panels enable quick and easy connection between the field cabling and control cabinet cabling. The passive termination panels are a convenient alternative to the on-site assembly of RJ45 connectors.

Your advantages

- Extended temperature range of -40 °C ... +75 °C
- Fast connection of the field cable
- Wiring space covered with front panel cover
- Tool-free shield contacting with strain relief
- PoE-capable in accordance with IEEE 802.3bt, type 4

Commercial data

Item number	2703018
Packing unit	10 pc
Minimum order quantity	1 pc
Sales key	DN07
Product key	DNC334
GTIN	4055626462882
Weight per piece (including packing)	65.37 g
Weight per piece (excluding packing)	62.63 g
Customs tariff number	85369010
Country of origin	DE

Technical data

Notes

Note on application

Note on application	Only for industrial use

Utilization restriction

CCCex note	Use in potentially explosive areas is not permitted in China.

Product properties

Product type	Patch panel
MTTF	105699 Years

Insulation characteristics

Overvoltage category	II
Pollution degree	2

Electrical properties

Rated insulation voltage	85 V DC

Interfaces

Data: Ethernet interface, 10/100/1000Base-T(X) in accordance with IEEE 802.3

Serial transmission speed	10/100/1000 Mbps
Frequency range	125 MHz
Connection method	Push-in connection
Note on the connection method	CAT5e
Pin assignment	1:1
Transmission length	100 m (including patch cables)
Single conductor/terminal point, rigid	0.2 mm² ... 1.5 mm²
Single-wire/terminal point, flexible	0.2 mm² ... 1.5 mm²
Conductor cross-section, flexible, with ferrule, with plastic sleeve	0.25 mm² ... 1.5 mm² (only together with CRIMPFOX 6)
Conductor cross-section, flexible, with ferrule, without plastic sleeve	0.25 mm² ... 1.5 mm² (only together with CRIMPFOX 6)
Max. AWG conductor cross-section, flexible	16
Min. AWG conductor cross-section, flexible	26
Single-wire/terminal point, rigid AWG max.	16
Single-wire/terminal point, rigid AWG min.	26
Stripping length	8 mm
Transmission medium	Copper
Output nominal voltage	< 57 V DC
Maximum output power	60 W
Maximum output current	725 mA (Per channel)

Data: Ethernet interface, 10/100/1000Base-T(X) in accordance with IEEE 802.3

Connection method	RJ45 jack

Dimensions

Dimensional drawing	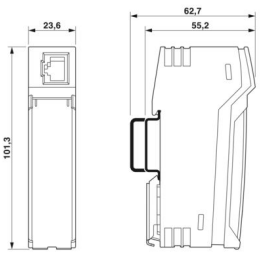
Width	23.8 mm
Height	101.3 mm
Depth	50 mm

Material specifications

Color (Housing)	light gray (RAL 7035)
Material (Housing)	Plastic
Flammability rating according to UL 94	V0

Cable/line

External cable diameter	5.5 mm ... 6.5 mm

Mechanical tests

Vibration resistance in accordance with EN 60068-2-6/IEC 60068-2-6	Operation: 10 Hz ... 57 Hz, amplitude ±3.5 mm, 57 Hz ... 150 Hz, 5g
Shock in accordance with EN 60068-2-27/IEC 60068-2-27	Operation: 30g for 11 ms, three shocks in each spatial direction
Continuous shock in accordance with EN 60068-2-27/IEC 60068-2-27	Operation: 10g for 16 ms, 1000 shocks in each spatial direction

Environmental and real-life conditions

Ambient conditions

Degree of protection	IP20 (Manufacturer's declaration)
Ambient temperature (operation)	-40 °C ... 75 °C
Ambient temperature (storage/transport)	-40 °C ... 85 °C
Altitude	≤ 5000 m (For restrictions, see the manufacturer's declaration for altitude operation)
Permissible humidity (operation)	10 % ... 95 % (non-condensing)

Approvals

CE

Certificate	CE-compliant

UL

Identification	UL 61010 Listed

Mounting

Mounting type	DIN rail mounting, stationary
Assembly note	The product can be snapped onto all 35 mm DIN rails in accordance with EN 60715.

Drawings

Dimensional drawing

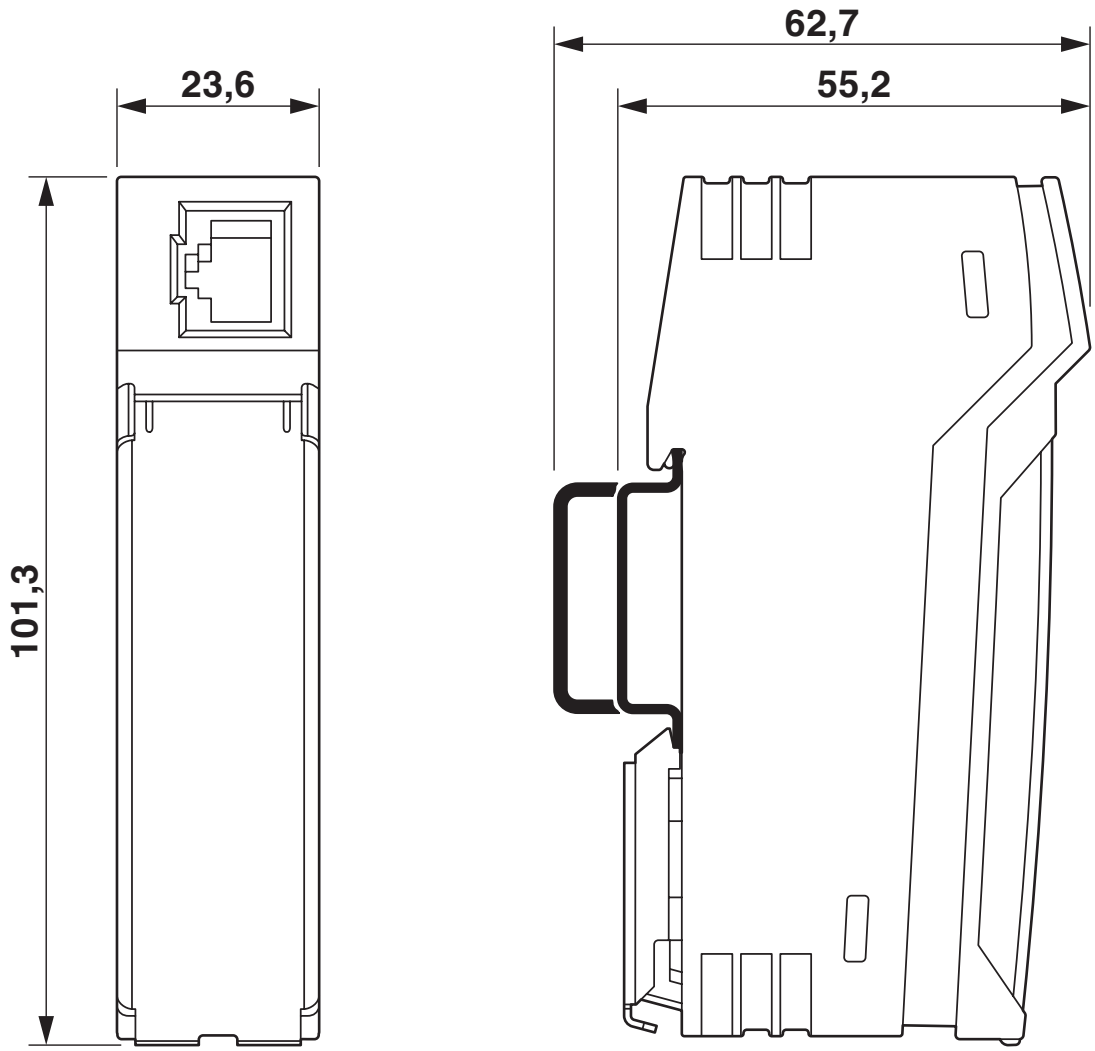

Compact housing

Schematic diagram

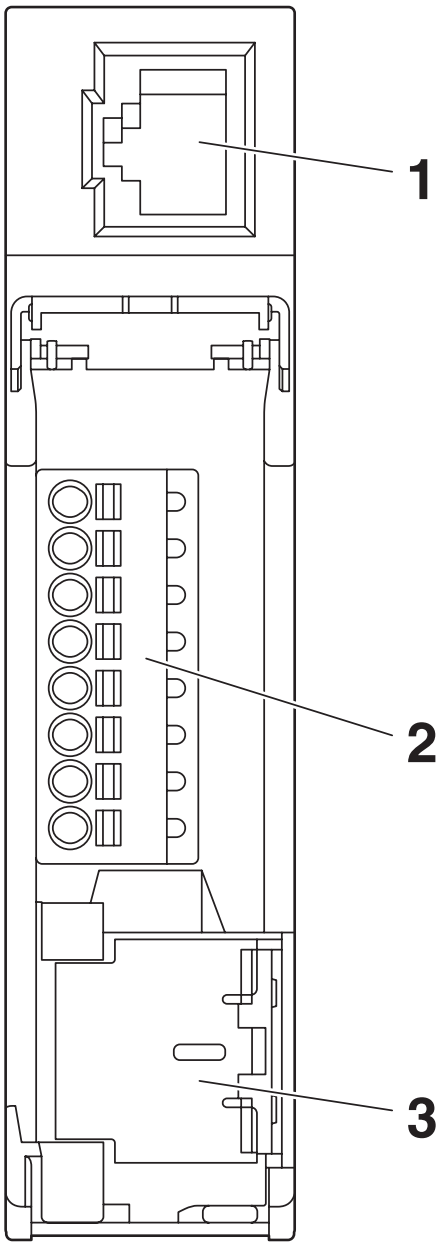

Front view

Schematic diagram

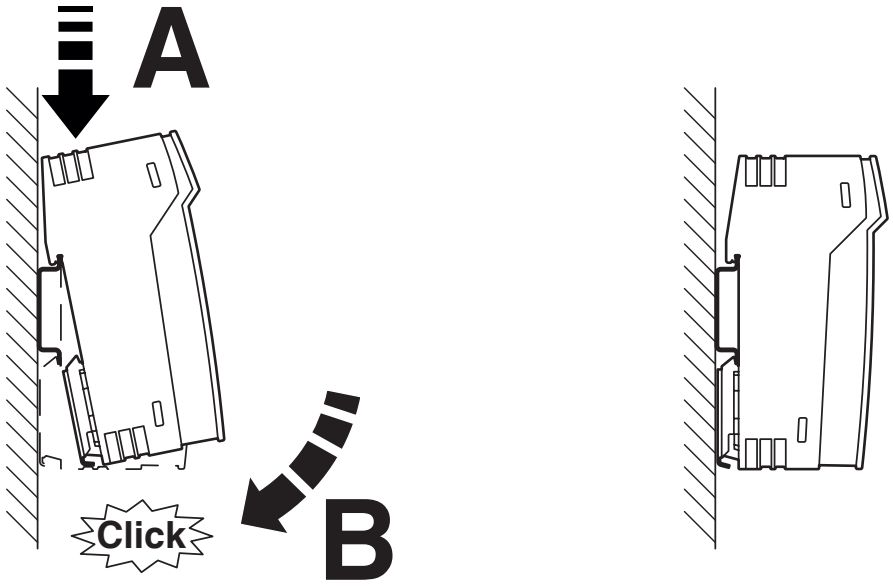

Mounting on a DIN rail

Schematic diagram

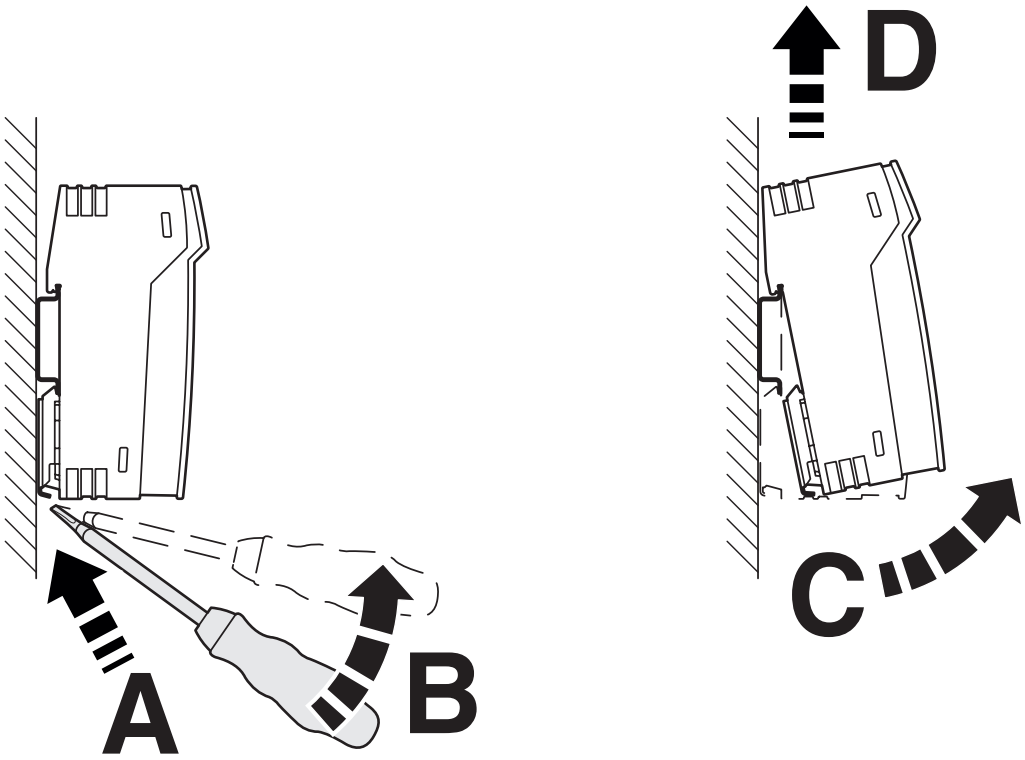

Removal

Schematic diagram

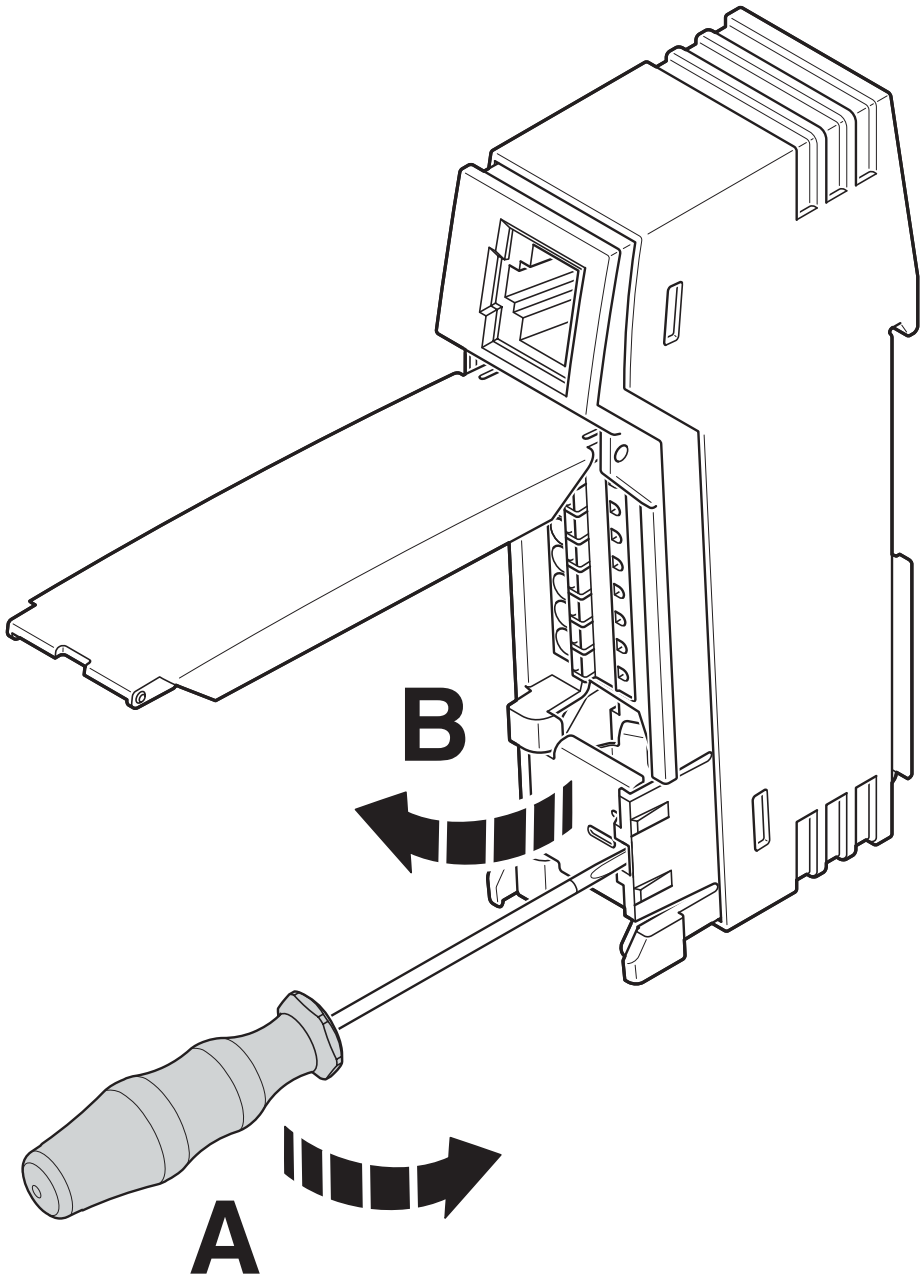

Open shield contact spring

Schematic diagram

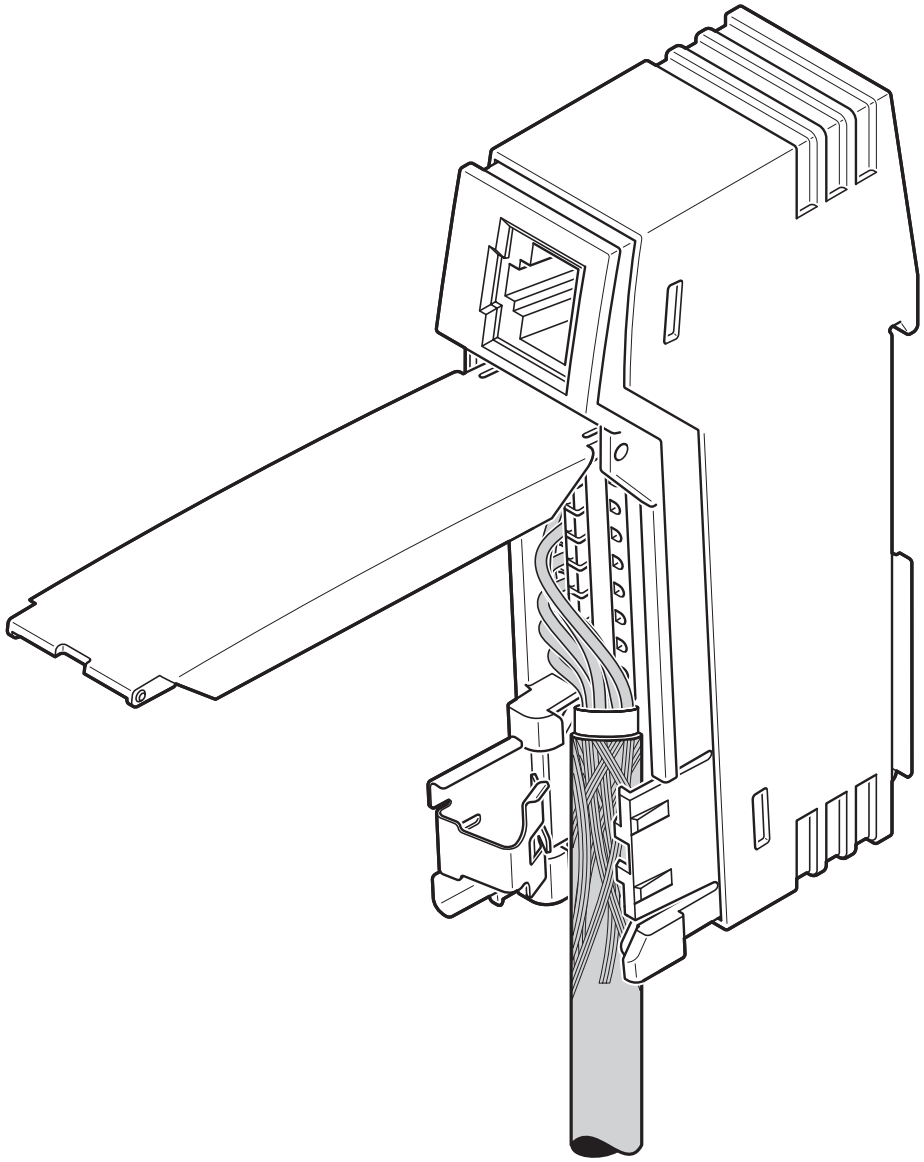

Inserting the cable

Schematic diagram

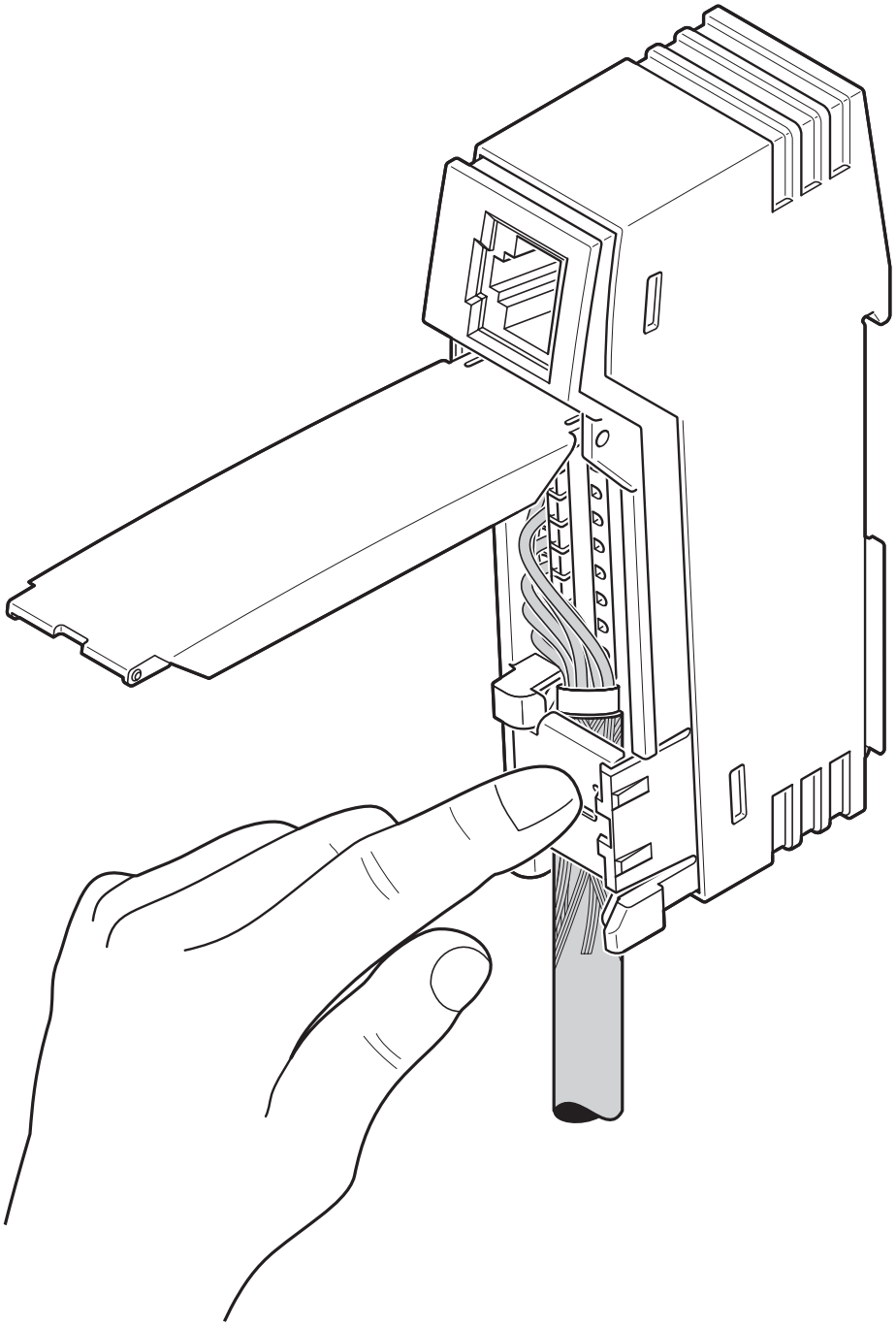

Close shield contact spring

Schematic diagram

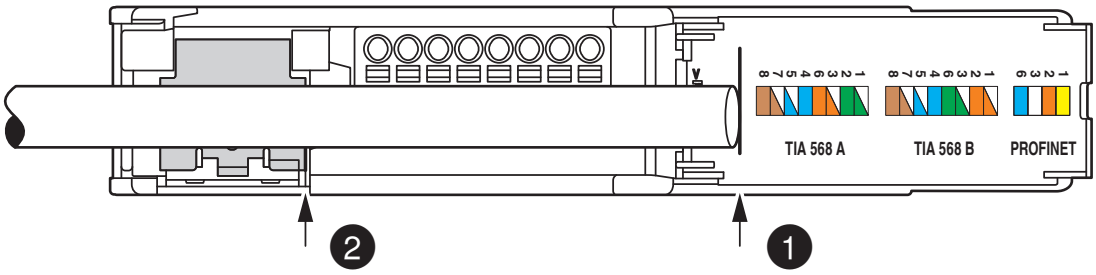

Stripping length

Circuit diagram

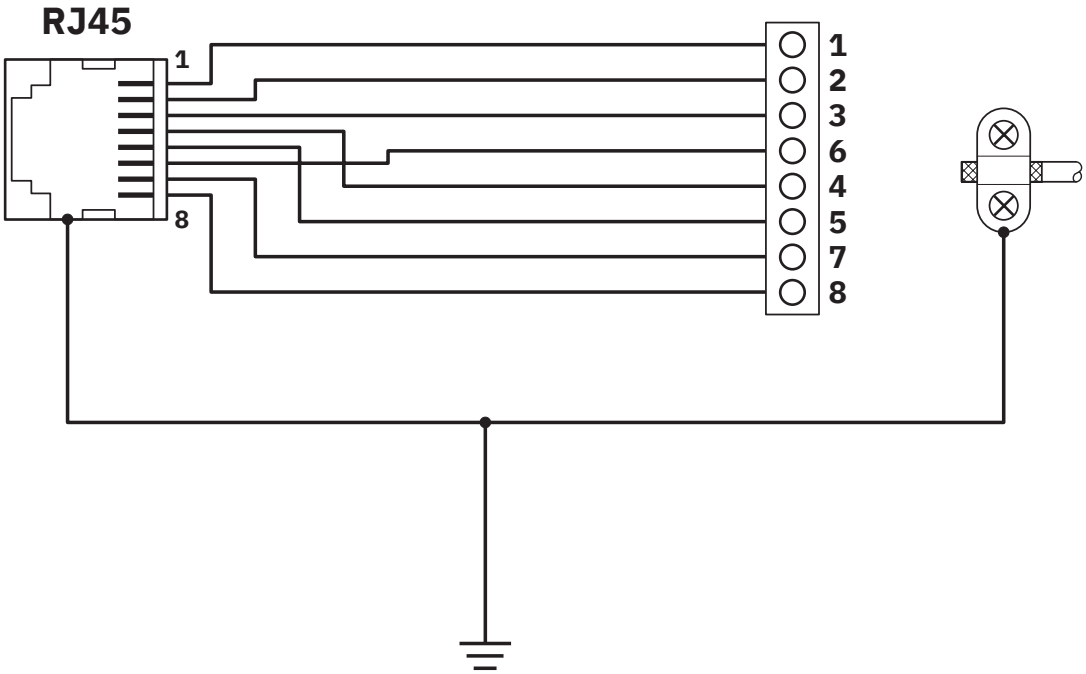

Approvals

To download certificates, visit the product detail page: https://www.phoenixcontact.com/us/products/2703018

cULus Listed
Approval ID: E238705

Classifications

ECLASS

ECLASS-13.0	19170112
ECLASS-15.0	19170112

ETIM

ETIM 10.0	EC001128

UNSPSC

UNSPSC 21.0	43223300

Environmental product compliance

EU RoHS

Fulfills EU RoHS substance requirements	Yes, No exemptions

China RoHS

Environment friendly use period (EFUP)	EFUP-E
	No hazardous substances above the limits

EU REACH SVHC

REACH candidate substance (CAS No.)	No substance above 0.1 wt%

EF3.1 Climate Change

CO2e kg	1.945 kg CO2e

Phoenix Contact 2026 © - all rights reserved
https://www.phoenixcontact.com

Phoenix Contact USA
586 Fulling Mill Road
Middletown, PA 17057, United States
(+717) 944-1300
info@phoenixcon.com