PSR-SPP-42-230UC/URM4/4NO/2NC - Extension module

2702925

https://www.phoenixcontact.com/us/products/2702925

Please be informed that the data shown in this PDF document is generated from our online catalog. Please find the complete data in the user documentation. Our general terms of use for downloads are valid.



The figure shows a version with a screw connection

1- or 2-channel contact extension with wide range input, 4 N/O contacts, 1 N/C contact, 1 confirmation current path, together with basic device up to Cat. 4, PL e in accordance with EN ISO 13849, plug-in Push-in terminal block, width: 22.5 mm

Product description

The URM4 contact extension device enables safety-related signals to be further processed as floating contacts for an input voltage range of 42 to 230 V AC/DC. The contact extension device specifically covers the operating range above a nominal voltage of 24 V.
The new device is approved in accordance with EN 50156 and can therefore be used in furnaces without any additional effort. In particular when used in conjunction with the corresponding PSR safety relay as a basic device, safety circuits up to PL e or SIL 3 can be implemented.

ELEKTROGERÄTE RÜCKNAHME

Commercial data

Item number	2702925
Packing unit	1 pc
Minimum order quantity	1 pc
Sales key	DN01
Product key	DNA151
GTIN	4055626428895
Weight per piece (including packing)	184.1 g
Weight per piece (excluding packing)	170.91 g
Customs tariff number	85371098
Country of origin	DE

Technical data

Notes

Note on application

Note on application	Only for industrial use

Product properties

Product type	Safety relays
Product family	PSRclassic
Application	Extension module
Control	1 and 2 channel
Mechanical service life	10x 10^6 cycles
Relay type	Electromechanical relay with force-guided contacts in accordance with IEC/EN 61810-3

Insulation characteristics

Overvoltage category	II, III (See the section “Insulation coordination”)
Degree of pollution	2

Times

Typ. starting time with U_s	< 100 ms (with Us / when controlled via A1)
Typical release time	< 40 ms (Control via A1 at 42 V DC)
	< 200 ms (Control via A1 at 230 V AC)
Recovery time	< 1 s

Electrical properties

Maximum power dissipation for nominal condition	16.1 W (at I_L^2 = 72 A², $P_{Total\ max}$ = 1.7 W + 14.4 W)
Nominal operating mode	100% operating factor
Rated insulation voltage	250 V AC
Rated surge voltage/insulation	

Supply

Rated control circuit supply voltage U_S	42 V AC/DC ... 230 V AC/DC -15 % / +10 %
Rated control supply current I_S	typ. 35 mA (at 42 V DC)
	typ. 15 mA (at 230 V AC)
Power consumption at U_S	1.5 W (with DC)
	1.7 W (with AC)
Apparent power	max. 3.5 VA (at U_S)
Inrush current	< 20 A (Δt = 100 µs at U_s)
Protective circuit	Surge protection; 275 V varistor / 411 V suppressor diode

Output data

Relay: Enabling current paths (13/14, 23/24, 33/34, 43/44)

Output description	2 N/O contacts in series, safety-related, floating

Number of outputs	4
Contact switching type	4 enabling current paths
Contact material	$AgSnO_2$
Switching voltage	min. 5 V AC/DC
	max. 250 V AC/DC
Switching power	min. 50 mW
Inrush current	min. 10 mA
	max. 8 A
Switching capacity	5 A (AC15)
	6 A (DC13)
Limiting continuous current	6 A (observe derating)
Sq. Total current	72 A^2 (observe derating)
Switching frequency	max. 0.5 Hz
Output fuse	6 A gL/gG (High demand)
	4 A gL/gG (Low demand)

Relay: Diagnostics contact (51/52)

Output description	2 N/O contacts in series, floating
Number of outputs	1
Contact switching type	1 confirmation current path
Contact material	$AgSnO_2$
Switching voltage	min. 5 V AC/DC
	max. 250 V AC/DC
Switching power	min. 50 mW
Inrush current	min. 10 mA
	max. 6 A
Switching capacity	1 A (AC15)
	1 A (DC13)
Limiting continuous current	1 A (see to derating)
Sq. Total current	1 A^2 (see to derating)
Switching frequency	max. 0.5 Hz
Mechanical service life	10x 10^6 cycles
Output fuse	1 A (gL/gG)

Relay: Signaling current path (61/62)

Output description	2 N/C contacts in parallel, floating
Number of outputs	1
Contact material	$AgSnO_2$
Switching voltage	min. 5 V AC/DC
	250 V AC/DC
Switching power	min. 50 mW
Inrush current	max. 6 A
Switching capacity	5 A (AC15)
	6 A (DC13)
Limiting continuous current	6 A (observe derating)

Sq. Total current	36 A^2 (observe derating)
Switching frequency	max. 0.5 Hz
Mechanical service life	10x 10^6 cycles
Output fuse	1 A (gL/gG)

Connection data

Connection technology

pluggable	yes

Conductor connection

Connection method	Push-in connection
Conductor cross-section rigid	0.2 mm² ... 1.5 mm²
Conductor cross-section flexible	0.2 mm² ... 1.5 mm²
Conductor cross-section, flexible, with ferrule, with plastic sleeve	0.25 mm² ... 1.5 mm² (only together with CRIMPFOX 6)
Conductor cross-section, flexible, with ferrule, without plastic sleeve	0.25 mm² ... 1.5 mm² (only together with CRIMPFOX 6)
Conductor cross-section AWG	24 ... 16
Stripping length	8 mm

Signaling

Operating voltage display	1 x LED (green)

Dimensions

Width	22.5 mm
Height	112 mm
Depth	114.5 mm

Material specifications

Color (Housing)	yellow (RAL 1018)
Housing material	PA

Characteristics

Safety data

Stop category (EN 60204-1)	0

Safety data: EN ISO 13849

Performance level (PL)	e (In conjunction with suitable evaluating device)

Safety data: IEC 61508 - High demand

Safety Integrity Level (SIL)	3 (In conjunction with suitable evaluating device)

Safety data: IEC 61508 - Low demand

Safety Integrity Level (SIL)	3 (In conjunction with suitable evaluating device)

Safety data: EN IEC 62061

Safety Integrity Level (SIL)	3 (In conjunction with suitable evaluating device)

Environmental and real-life conditions

Ambient conditions

Degree of protection	IP20
Min. degree of protection of inst. location	IP54
Ambient temperature (operation)	-20 °C ... 55 °C (observe derating)
Ambient temperature (storage/transport)	-40 °C ... 85 °C
Maximum altitude	≤ 2000 m (Above sea level)
Max. permissible humidity (storage/transport)	75 % (on average, 85% infrequently, non-condensing)
Max. permissible relative humidity (operation)	75 % (on average, 85% infrequently, non-condensing)
Shock	15g
Vibration (operation)	10 Hz ... 150 Hz, amplitude 0.15 mm, 2g

Approvals

CE

Identification	CE-compliant

Mounting

Mounting type	DIN rail mounting
Assembly note	See derating curve
Mounting position	vertical or horizontal

Drawings

Application drawing

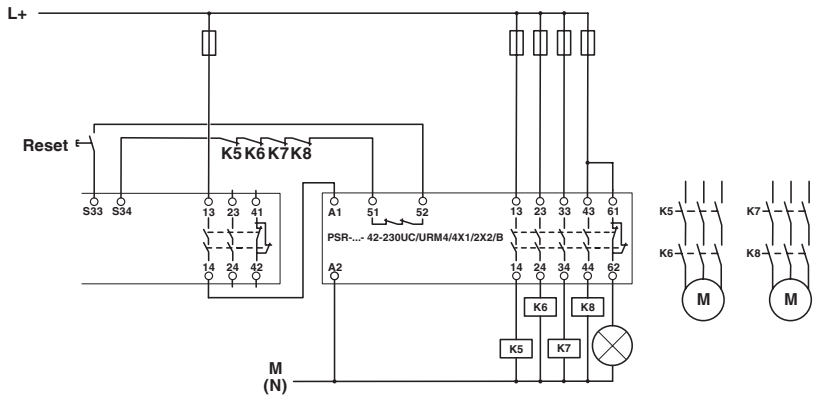

Contact extension

Application drawing

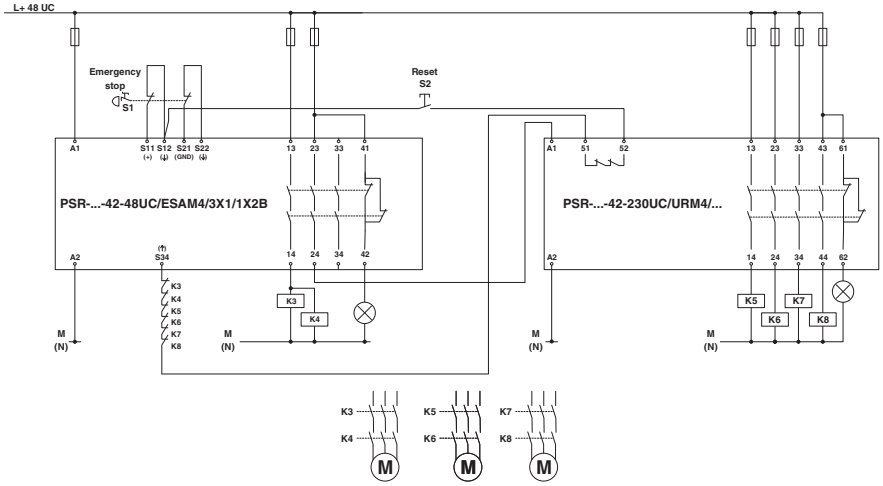

Two-channel emergency stop monitoring with contact extension

Block diagram

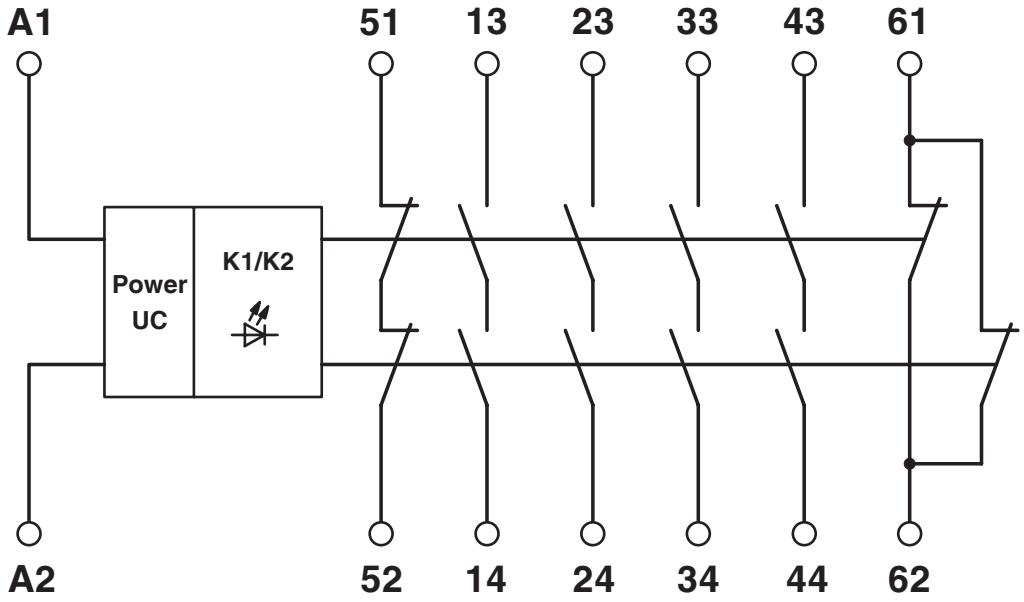

Block diagram

Approvals

To download certificates, visit the product detail page: https://www.phoenixcontact.com/us/products/2702925

cULus Listed
Approval ID: E140324

Functional Safety
Approval ID: 968/EZ 575.03/23

Classifications

ECLASS

ECLASS-13.0	27371819
ECLASS-15.0	27371819
ECLASS-15.0 ASSET	27250101

ETIM

ETIM 10.0	EC001449

UNSPSC

UNSPSC 21.0	39122200

Environmental product compliance

EU RoHS

Fulfills EU RoHS substance requirements	Yes
Exemption	7(a), 7(a)-I, 7(c)-I

China RoHS

Environment friendly use period (EFUP)	EFUP-50
	An article-related China RoHS declaration table can be found in the download area for the respective article under "Manufacturer declaration". For all articles with EFUP-E, no China RoHS declaration table issued and required.

EU REACH SVHC

REACH candidate substance (CAS No.)	Lead(CAS: 7439-92-1)
SCIP	4b330aef-4171-49b2-8664-06593ca59094

Phoenix Contact 2026 © - all rights reserved
https://www.phoenixcontact.com

Phoenix Contact USA
586 Fulling Mill Road
Middletown, PA 17057, United States
(+717) 944-1300
info@phoenixcon.com