GW DEVICE SERVER 1E/1DB9 - Interface converters

2702758

https://www.phoenixcontact.com/us/products/2702758

Please be informed that the data shown in this PDF document is generated from our online catalog. Please find the complete data in the user documentation. Our general terms of use for downloads are valid.

CRA-READY



Serial device server for converting serial data (RS-232/422/485) to Ethernet data (RJ45). Supports TCP and UDP protocols. COM port redirector software and Windows drivers are available for download. Includes one RJ45 port and one D-SUB 9 port.

ELEKTROGERÄTE RÜCKNAHME

Commercial data

Item number	2702758
Packing unit	1 pc
Minimum order quantity	1 pc
Sales key	DN11
Product key	DNC321
GTIN	4055626339153
Weight per piece (including packing)	171.3 g
Weight per piece (excluding packing)	111 g
Customs tariff number	85176200
Country of origin	US

Technical data

Notes

Note on application

Note on application	Only for industrial use
Note on application	As things stand now, we are preparing the product so that, as of December 11, 2027, it will comply with the requirements of the EU Cyber Resilience Act (CRA) based on the information currently available regarding the CRA.

Utilization restriction

EMC note	EMC: class A product, see manufacturer's declaration in the download area

Utilization restriction

CCCex note	Use in potentially explosive areas is not permitted in China.

Product properties

Product type	Interface converter
MTBF	92.1 Years (Telcordia standard, 25°C temperature, 50% stress, Environmental Factor = 1.0)
	61.4 Years (Telcordia standard, 40°C temperature, 50% stress, Environmental Factor = 1.5)
Special properties	The product is being prepared for compliance with the Cyber Resilience Act (CRA)

Electrical properties

Electrical isolation	IEC UL 61010-1 (VCC // Ethernet)
Maximum power dissipation for nominal condition	1.44 W (at 24 V DC)
Test voltage data interface/data interface	1.5 kV_{rms} (50 Hz, 1 min.)
Test voltage data interface/power supply	1.5 kV_{rms} (50 Hz, 1 min.)
	1.5 kV_{rms}

Supply

Supply voltage range	10.8 V DC ... 30 V DC (via pluggable COMBICON screw terminal block)
Typical current consumption	48 mA (24 V DC)
Max. current consumption	60 mA (24 V DC)

Function

Management	Web-based management
Status and diagnostic indicators	LEDs: Status, ACT/LNK (Ethernet data traffic)

Connection data

Supply

Conductor cross-section, flexible	0.20 mm² ... 2.50 mm²
Conductor cross-section AWG	24 ... 12

Tightening torque	0.5 Nm ... 0.6 Nm

Interfaces

Signal	Ethernet
Web server	yes

Data: Ethernet interface, 10/100Base-T(X) in accordance with IEEE 802.3

Serial transmission speed	10/100 Mbps, auto negotiation
Connection method	RJ45 jack, shielded
No. of channels	1
Transmission length	≤ 100 m (shielded twisted pair)
Protocols supported	TCP/IP, UDP, ASCII
Auxiliary protocols	ARP, DHCP (Client), PING

Data: RS-232

Serial transmission speed	0.3; 0.6; 1.2; 2.4; 4.8; 9.6; 19.2; 38.4; 57.6; 115.2; 230.4 Kbps
Number of connections	1
Connection method	D-SUB 9 plug
Pin assignment	DTE
Transmission length	15 m
File format/coding	5/6/7/8 Data bits, 1/2 Stop bits, None/Even/Odd/Mark/Space Parity
Data flow control/protocols	Software handshake, Xon/Xoff or hardware handshake RTS/CTS

Data: RS-422

Serial transmission speed	0.3; 0.6; 1.2; 2.4; 4.8; 9.6; 19.2; 38.4; 57.6; 115.2; 230.4 Kbps
Number of connections	1
Connection method	D-SUB 9 plug
Pin assignment	2, 3, 5, 7, 8
Transmission length	≤ 1200 m
Termination resistor	120 Ω (configurable)
File format/coding	5/6/7/8 Data bits, 1/2 Stop bits, None/Even/Odd/Mark/Space Parity

Data: RS-485

Serial transmission speed	0.3; 0.6; 1.2; 2.4; 4.8; 9.6; 19.2; 38.4; 57.6; 115.2; 230.4 Kbps
Number of connections	1
Connection method	D-SUB 9 plug
Pin assignment	3, 5, 7
Termination resistor	120 Ω (configurable)
File format/coding	5/6/7/8 Data bits, 1/2 Stop bits, None/Even/Odd/Mark/Space Parity

Dimensions

Width	22.5 mm
Height	99 mm
Depth	115 mm

Material specifications

Color (Housing)	light gray (RAL 7035)
Housing material	PA 6.6

Mechanical tests

Vibration resistance in accordance with EN 60068-2-6/IEC 60068-2-6	:
Shock in accordance with EN 60068-2-27/IEC 60068-2-27	:

Environmental and real-life conditions

Ambient conditions

Degree of protection	IP20
Ambient temperature (operation)	-40 °C ... 70 °C
Ambient temperature (storage/transport)	-40 °C ... 80 °C
Altitude	< 2000 m
Permissible humidity (operation)	10 % ... 95 % (non-condensing)
Permissible humidity (storage/transport)	5 % ... 95 % (non-condensing)

Approvals

Conformity/Approvals

Conformance	CE-compliant
UL, USA	UL 61010-1
UL, USA / Canada	Class I, Div. 2, Groups A, B, C, D T4A
Noxious gas test	ISA-S71.04-1985 G3 Harsh Group A

Ex data

ATEX	DEMKO 18ATEX 2026X: II 3 G Ex ec IIC T4 Gc
IECEx	IECEx UL 18.0023X Ex ec IIC T4 Gc

EMC data

Electromagnetic compatibility	Conformance with EMC Directive 2014/30/EU
Noise immunity	EN 61000-6-2:2005

Noise emission

Standards/regulations	EN 61000-6-4

Standards and regulations

Standards/regulations	EN 55022, EN 55024

Mounting

Mounting type	DIN rail mounting

Drawings

Block diagram

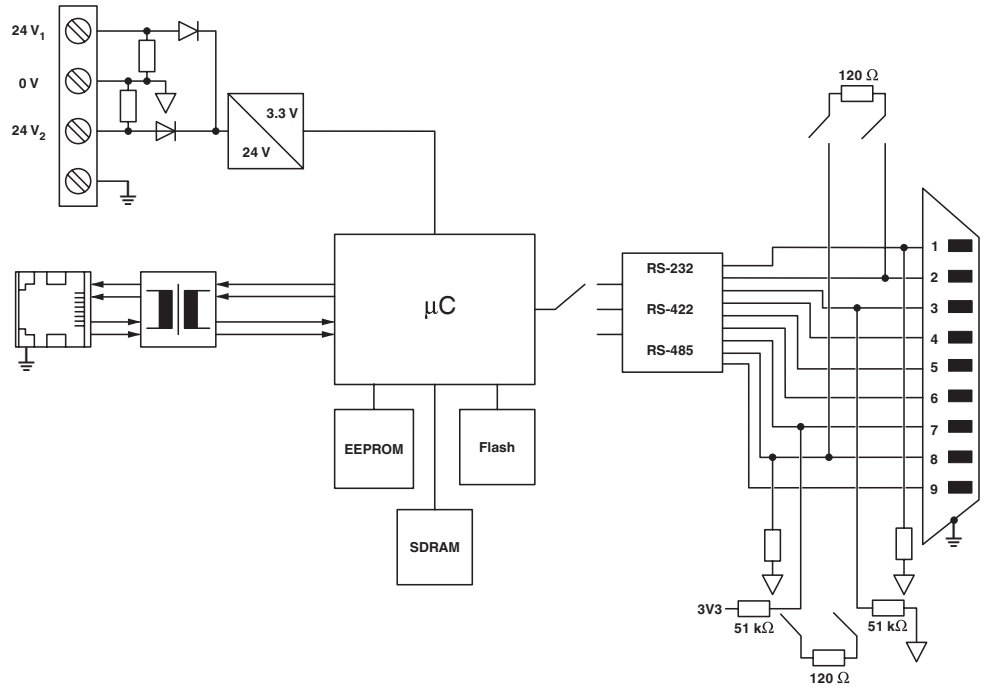

Approvals

To download certificates, visit the product detail page: https://www.phoenixcontact.com/us/products/2702758

UL Listed
Approval ID: E238705

cUL Listed
Approval ID: E238705

IECEx
Approval ID: IECEx UL 18.0023X

cUL Listed
Approval ID: E196811

UL Listed
Approval ID: E196811

ATEX
Approval ID: DEMKO 18 ATEX 2026X

Classifications

ECLASS

ECLASS-13.0	27242208
ECLASS-15.0	27242208

ETIM

ETIM 10.0	EC001423

UNSPSC

UNSPSC 21.0	43222600

Environmental product compliance

EU RoHS

Fulfills EU RoHS substance requirements	Yes, No exemptions

China RoHS

Environment friendly use period (EFUP)	EFUP-E
	No hazardous substances above the limits

EU REACH SVHC

REACH candidate substance (CAS No.)	No substance above 0.1 wt%

Phoenix Contact 2026 © - all rights reserved
https://www.phoenixcontact.com

Phoenix Contact USA
586 Fulling Mill Road
Middletown, PA 17057, United States
(+717) 944-1300
info@phoenixcon.com