PSR-MC82-5NO-1NC-1DO-24DC-SC - Extension module

2702382

https://www.phoenixcontact.com/us/products/2702382

Please be informed that the data shown in this PDF document is generated from our online catalog. Please find the complete data in the user documentation. Our general terms of use for downloads are valid.



Contact extension up to SIL 3, Cat. 4, PL e in conjunction with suitable evaluation device, 5 enabling current paths, U_S = 24 V DC, plug-in screw terminal block

Product description

The contact extension PSR-MC82 enables the straightforward extension of the enabling paths of a basic device. It provides five additional enabling current paths and is extremely compact with an overall width of just 17.5 mm. The PSR-MC82 is suitable for classic signal generators, such as emergency stops or safety doors, as well as for use at fail-safe controllers.

Your advantages

- Up to Cat. 4/PL e in accordance with ISO 13849-1, SIL 3 in accordance with EN IEC 62061 in conjunction with suitable evaluation device
- Low housing width of just 17.5 mm
- 1- and 2-channel control
- 5 enabling current paths, 1 confirmation current path, 1 digital signal output
- Automatic activation

ELEKTROGERÄTE RÜCKNAHME

Commercial data

Item number	2702382
Packing unit	1 pc
Minimum order quantity	1 pc
Sales key	DN01
Product key	DNA181
GTIN	4055626145471
Weight per piece (including packing)	208.71 g

Weight per piece (excluding packing)	184.08 g
Customs tariff number	85371098
Country of origin	DE

Technical data

Notes

Note on application

Note on application	Only for industrial use

Product properties

Product type	Safety relays
Product family	PSRcompact
Application	Extension module
Control	1 and 2 channel
Relay type	Electromechanical relay with force-guided contacts in accordance with IEC/EN 61810-3

Insulation characteristics

Overvoltage category	II, III
Degree of pollution	2

Times

Typ. starting time with U_s	< 50 ms (with U_s when controlled via A1)
Typical release time	< 25 ms (when controlled via A1)
Recovery time	< 100 ms

Electrical properties

Maximum power dissipation for nominal condition	15.2 W (U_B = 30 V , I_L^2 = 64 A²; $P_{Total\ max}$ = 2.4 W + 12.8 W)
Nominal operating mode	100% operating factor
Rated insulation voltage	250 V AC
Rated surge voltage/insulation	See data sheet, section “Insulation coordination”.

Supply

Designation	For signal output M1
Rated control circuit supply voltage U_S	19.2 V DC ... 30 V DC
Rated control circuit supply voltage U_S	24 V DC -20 % / +25 %
Protective circuit	Serial protection against polarity reversal
	Suppressor diode
	Short-circuit protection for M1

Input data

Digital: A1

Description of the input	safety-related
Number of inputs	1
Input voltage range "1" signal	19.2 V DC ... 30 V DC
Inrush current	max. 125 mA (Δt = 7 ms at U_s)
	max. 1 ms (Test pulse width, high test pulse)

Filter time	min. 10 ms (Test pulse rate, high test pulse)
	max. 1 ms (Test pulse width of low test pulses)
	min. 5 ms (Test pulse rate for low test pulse)
Protective circuit	Reverse polarity protection
	Suppressor diode
Current consumption	typ. 80 mA

Output data

Relay: Enabling current paths (23/24 ... 63/64)

Output description	2 N/O contacts in series, safety-related, floating
Number of outputs	5 (undelayed)
Contact switching type	5 enabling current paths
Contact material	$AgSnO_2$
Switching voltage	min. 5 V AC/DC
	max. 250 V AC/DC (Observe the load curve)
Switching power	min. 50 mW
Inrush current	min. 10 mA
	max. 20 A (≤ 100 ms)
Switching capacity	3 A (24 V (DC13))
	3 A (250 V (AC15))
Limiting continuous current	6 A
Sq. Total current	64 A^2 (observe derating)
Switching frequency	max. 0.1 Hz
Mechanical service life	10x 10^6 cycles
Output fuse	10 A gL/gG
	6 A gL/gG (for low-demand applications)

Relay: Diagnostics contact (11/12)

Output description	Diagnostic contact, 2 NC in series, floating
Number of outputs	1 (undelayed)
Contact switching type	1 confirmation current path
Contact material	$AgSnO_2$
Switching voltage	min. 5 V AC/DC
	max. 24 V DC
Switching power	min. 50 mW
Inrush current	min. 10 mA
	max. 1 A
Limiting continuous current	100 mA
Switching frequency	max. 0.1 Hz
Mechanical service life	10x 10^6 cycles
Output fuse	1 A gL/gG (Undelayed contacts)

Signal: M1

Output description	non-safety-related

Number of outputs	1 (digital, PNP)
Voltage	22 V DC (U_s - 2 V)
Current	max. 100 mA
Maximum inrush current	500 mA (Δt = 100 ms at U_s)
Ohmic load	min. 240 Ω
Switching frequency	0.5 Hz (ohmic)
Protective circuit	Suppressor diode
Short-circuit protection	Yes
Discharging circuit	No

Connection data

Connection technology

pluggable	yes

Conductor connection

Connection method	Screw connection
Conductor cross-section rigid	0.2 mm² ... 2.5 mm²
Conductor cross-section flexible	0.2 mm² ... 2.5 mm²
Conductor cross-section AWG	24 ... 12
Stripping length	7 mm
Screw thread	M3
Tightening torque	0.5 Nm ... 0.6 Nm

Signaling

Status display	2 x LED (green)

Dimensions

Width	17.5 mm
Height	112.7 mm
Depth	111.7 mm

Material specifications

Color (Housing)	yellow (RAL 1018)
Housing material	PA

Characteristics

Safety data

Stop category (EN 60204-1)	0

Safety data: EN ISO 13849

Performance level (PL)	e

Safety data: IEC 61508 - High demand

Safety Integrity Level (SIL)	3 (In conjunction with suitable evaluating device)

Safety data: IEC 61508 - Low demand

Safety Integrity Level (SIL)	3 (In conjunction with suitable evaluating device)

Safety data: EN IEC 62061

Safety Integrity Level (SIL)	3

Environmental and real-life conditions

Ambient conditions

Degree of protection	IP20
Min. degree of protection of inst. location	IP54
Ambient temperature (operation)	-20 °C ... 60 °C (observe derating)
Ambient temperature (storage/transport)	-40 °C ... 80 °C
Maximum altitude	max. 2000 m (Above sea level)
Max. permissible humidity (storage/transport)	75 % (on average, 85% infrequently, non-condensing)
Max. permissible relative humidity (operation)	75 % (on average, 85% infrequently, non-condensing)
Shock (operation)	15g (In the event of stress caused by shock, contact reactions are possible for up to 6 ms)
Vibration (operation)	10 Hz ... 150 Hz, 2g (In the event of stress caused by vibration, contact reactions are possible for up to 1 ms.)

Approvals

CE

Identification	CE-compliant

Mounting

Mounting type	DIN rail mounting
Assembly note	See derating curve
Mounting position	vertical or horizontal

Drawings

Circuit diagram

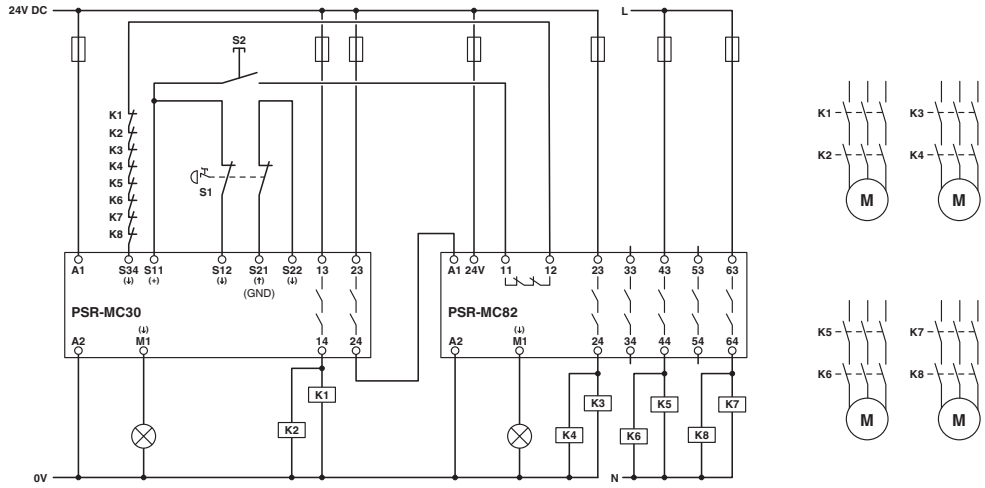

Example application

Block diagram

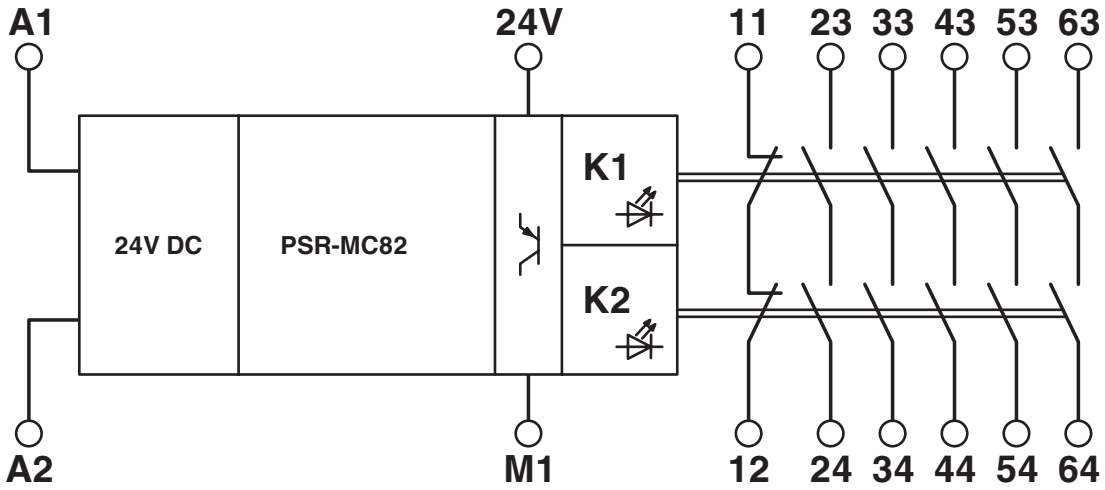

Block diagram

Approvals

To download certificates, visit the product detail page: https://www.phoenixcontact.com/us/products/2702382

Functional Safety
Approval ID: 4420515124303

Functional Safety
Approval ID: 44 78015124303

cULus Listed
Approval ID: E140324

Classifications

ECLASS

ECLASS-13.0	27371819
ECLASS-15.0	27371819

ETIM

ETIM 10.0	EC001449

UNSPSC

UNSPSC 21.0	39122200

Environmental product compliance

EU RoHS

Fulfills EU RoHS substance requirements	Yes
Exemption	7(a), 7(c)-I

China RoHS

Environment friendly use period (EFUP)	EFUP-50
	An article-related China RoHS declaration table can be found in the download area for the respective article under "Manufacturer declaration". For all articles with EFUP-E, no China RoHS declaration table issued and required.

EU REACH SVHC

REACH candidate substance (CAS No.)	Lead(CAS: 7439-92-1)
SCIP	5cc21dee-aeaf-4113-b01b-485afa7da360

Phoenix Contact 2026 © - all rights reserved
https://www.phoenixcontact.com

Phoenix Contact USA
586 Fulling Mill Road
Middletown, PA 17057, United States
(+717) 944-1300
info@phoenixcon.com