PSR-MM30-2NO-2DO-24DC-SC - Safety relay module

2702357

https://www.phoenixcontact.com/us/products/2702357

Please be informed that the data shown in this PDF document is generated from our online catalog. Please find the complete data in the user documentation. Our general terms of use for downloads are valid.



2-channel over-speed and zero-speed safety relay up to SIL 3, Cat. 4, PL e, 2 safe relay outputs, suitable for connecting HTL, TTL, or sine/cosine encoders as well as proximity switches, plug-in screw terminal block, width: 22.5 mm

Your advantages

- Monitoring of up to three different speeds as well as downtime
- Compatible with a range of motion sensors
- Easy parameterization and online monitoring with the PSRmotion software, which can be downloaded free of charge
- Force-guided relay contacts, parameterizable signal outputs
- Up to Cat. 4/PL e in accordance with EN ISO 13849-1, SIL 3 in accordance with EN IEC 62061, SIL 3 in accordance with IEC 61508

ELEKTROGERÄTE RÜCKNAHME

Commercial data

Item number	2702357
Packing unit	1 pc
Minimum order quantity	1 pc
Sales key	DN01
Product key	DNA242
GTIN	4055626133225
Weight per piece (including packing)	180.9 g
Weight per piece (excluding packing)	191.8 g
Customs tariff number	90328900
Country of origin	DE

Technical data

Notes

Note on application

Note on application	Only for industrial use

Product properties

Product type	Safety device
Application	Zero-speed safety relay
	Over-speed safety relay
Control	2-channel
Relay type	Electromechanical relay with force-guided contacts in accordance with IEC/EN 61810-3

Insulation characteristics

Overvoltage category	III
Degree of pollution	2

Times

Typical response time	< 200 ms (For U_s autostart)
	< 150 ms (For U_s manual, monitored start)
Delay time range	0 s ... 10 s ±10 % (Adjustable switch-on delay for downtime contacts 23/24)
Restart time	< 1 s (Boot time)
Recovery time	< 1 s

Electrical properties

Maximum power dissipation for nominal condition	6.5 W (at U_S = 26.4 V, U_{INPUT} =30 V, I_L^2 = 72 A²)
Nominal operating mode	100% operating factor
Interfaces	Encoder
	Proximity switches
Rated insulation voltage	250 V AC
Rated surge voltage/insulation	Basic insulation 4 kV between all current paths and housing
	Safe isolation, reinforced insulation 6 kV between input circuit (A1/A2, I1, I2, I3, MI1, MI2, IN1, IN2, S34, MO1, MO2, RJ45, USB) and the enabling current paths (13/14, 23/24)

Supply

Designation	A1/A2
Rated control circuit supply voltage U_S	20.4 V DC ... 26.4 V DC
Rated control circuit supply voltage U_S	24 V DC -15 % / +10 % (provide external protection)
Rated control supply current I_S	typ. 74 mA
Power consumption at U_S	typ. 1.78 W
Inrush current	< 18 A (Δt = 500 µs at U_s)
Filter time	2 ms (at A1 in the event of voltage dips at U_s)

Protective circuit	Serial protection against polarity reversal; 33 V suppressor diode

Input data

Digital: Operating mode and monitoring inputs

Description of the input	NPN, IEC 61131-2, type 1
Number of inputs	1 (Non-safety-related start input: S34)
	3 (Safety-related operating mode inputs: I1, I2, I3)
	2 (Safety-related monitoring inputs: MI1, MI2)
Discrepancy time	2 s (I1, I2, I3)
	2.5 s (MI1, MI2)
Input voltage range "0" signal	0 V DC ... 5 V DC
Input voltage range "1" signal	15 V DC ... 30 V DC
Input current range "0" signal	0 mA ... 1.5 mA
Inrush current	< 5 mA
Filter time	max. 2 ms (Test pulse width; low test pulses for operating mode and monitoring inputs)
	Test pulse rate = 5 x Test pulse width
Max. permissible overall conductor resistance	150 Ω
Protective circuit	33 V suppressor diode
Current consumption	typ. 4 mA (at U_S)

Measurement

Input name	Proximity switch inputs
Description of the input	NPN, IEC 61131-2, type 1
Number of inputs	2 (Safety-related proximity switch inputs: IN1 IN2)
Input voltage range "0" signal	0 V DC ... 5 V DC
Input voltage range "1" signal	15 V DC ... 30 V DC
Input current range "0" signal	0 mA ... 1.5 mA
Inrush current	< 12 mA
Precision	± 2 % (in reference to the parameterized limit value)
Limit frequency	max. 2 kHz (Minimum pulse duration: 45 µs)
Max. permissible overall conductor resistance	150 Ω
Protective circuit	33 V suppressor diode
Current consumption	typ. 10 mA (at U_S)

Measurement

Input name	Encoder input
Description of the input	TTL, HTL, Sin/Cos
Number of inputs	1 (Safety-related encoder input, RJ45)
Precision	± 2 % (in reference to the parameterized limit value)
Limit frequency	max. 400 kHz
	max. 250 kHz For active diagnostic safety encoder
Max. permissible overall conductor resistance	150 Ω
HTL Signal form/signal level	0 V DC ... 3 V DC (Low)
	12 V DC ... 30 V DC (High)

TTL Signal form/signal level	0 V DC ... 0.9 V DC (Low)
	2.5 V DC ... 5 V DC (High)
Sine / cosine Signal form/signal level	2 V DC ... 3 V DC (1 V_{pp} differential signal)
Current consumption	< 3 mA (Per track for U_S)

Output data

Relay: Enabling current path

Output description	2 NO contacts each in series, without delay, floating
Number of outputs	2 (safety-related N/O contacts: 13/14, 23/24)
Contact switching type	2 enabling current paths
Contact material	$AgSnO_2$
Switching voltage	min. 12 V AC/DC
	max. 250 V AC/DC (Observe the load curve)
Switching power	min. 60 mW
Inrush current	min. 3 mA
	max. 6 A
Switching capacity	4 A (24 V (DC13))
	5 A (250 V (AC15))
Limiting continuous current	6 A
Sq. Total current	72 A^2 (observe derating)
Switching frequency	max. 0.1 Hz
Mechanical service life	10x 10^6 cycles
Output fuse	6 A gL/gG

Signal

Output description	PNP
Number of outputs	2 (Non-safety-related signal outputs: MO1, MO2)
Voltage	approx. 22 V DC (U_s - 2 V)
Current	max. 100 mA
Maximum inrush current	500 mA (Δt = 1 ms at U_s)
Protective circuit	33 V suppressor diode
Short-circuit protection	no

Connection data

Connection technology

pluggable	yes

Conductor connection

Connection method	Screw connection
Conductor cross-section rigid	0.2 mm² ... 2.5 mm²
Conductor cross-section flexible	0.2 mm² ... 2.5 mm²
Conductor cross-section AWG	24 ... 12
Stripping length	7 mm
Screw thread	M3

Tightening torque	0.5 Nm ... 0.6 Nm

Signaling

Status display	2x LED green (OUT1, OUT2)
Operating voltage display	1 x green LED (PWR)

Dimensions

Width	22.5 mm
Height	112.2 mm
Depth	114.5 mm

Material specifications

Color (Housing)	yellow (RAL 1018)
Housing material	PA

Characteristics

Safety data

Stop category (EN 60204-1)	0

Safety data: EN ISO 13849

Performance level (PL)	e (6 A DC1, 17520 switching cycles/year)

Safety data: IEC 61508 - High demand

Safety Integrity Level (SIL)	3

Safety data: EN IEC 62061

Safety Integrity Level (SIL)	3 (For applications in SIL 3, the required demand rate for the safety function is once per day.)

Environmental and real-life conditions

Ambient conditions

Degree of protection	IP20
Min. degree of protection of inst. location	IP54
Ambient temperature (operation)	-40 °C ... 55 °C (observe derating)
Ambient temperature (storage/transport)	-40 °C ... 70 °C
Maximum altitude	≤ 2000 m (Above sea level)
Max. permissible humidity (storage/transport)	75 % (on average, 85% infrequently, non-condensing)
Max. permissible relative humidity (operation)	75 % (on average, 85% infrequently, non-condensing)
Shock	15g
Vibration (operation)	10 Hz ... 150 Hz, 2g

Approvals

CE

Certificate	CE-compliant

Mounting

Mounting type	DIN rail mounting
Assembly note	See derating curve
Mounting position	vertical or horizontal

Drawings

Circuit diagram

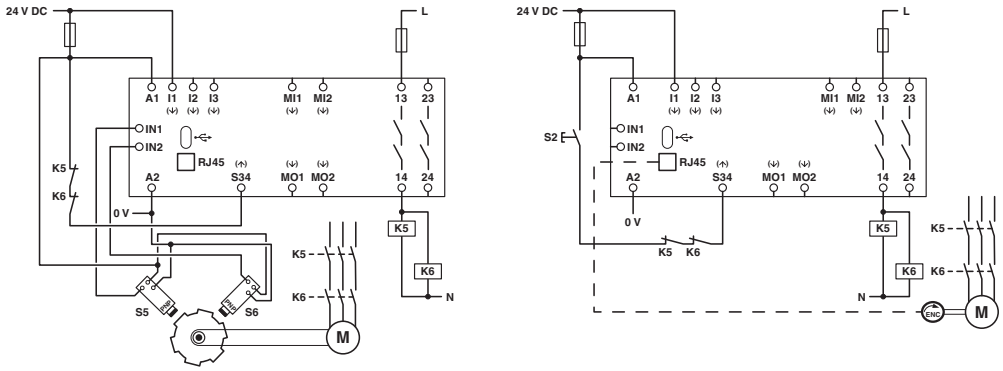

Example application

Block diagram

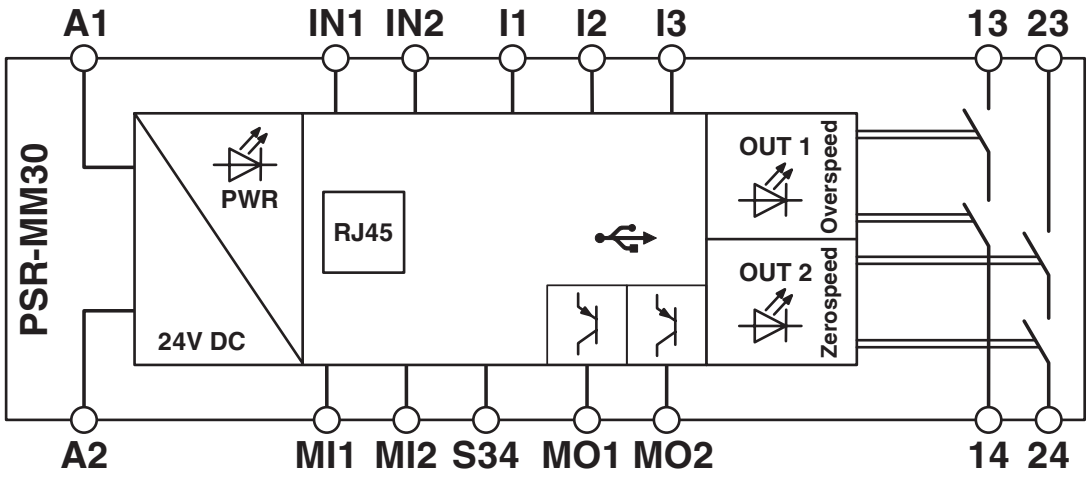

Block diagram

Approvals

To download certificates, visit the product detail page: https://www.phoenixcontact.com/us/products/2702357

Functional Safety
Approval ID: 01/205/5690.01/24

cULus Listed
Approval ID: E140324

Classifications

ECLASS

ECLASS-13.0	27371811
ECLASS-15.0	27371811
ECLASS-15.0 ASSET	27250101

ETIM

ETIM 10.0	EC001448

UNSPSC

UNSPSC 21.0	39122300

Environmental product compliance

EU RoHS

Fulfills EU RoHS substance requirements	Yes, No exemptions

China RoHS

Environment friendly use period (EFUP)	EFUP-E
	No hazardous substances above the limits

EU REACH SVHC

REACH candidate substance (CAS No.)	No substance above 0.1 wt%

Phoenix Contact 2026 © - all rights reserved
https://www.phoenixcontact.com

Phoenix Contact USA
586 Fulling Mill Road
Middletown, PA 17057, United States
(+717) 944-1300
info@phoenixcon.com