TC ANT MOBILE WALL 5M - Antenna

2702273

https://www.phoenixcontact.com/us/products/2702273

Please be informed that the data shown in this PDF document is generated from our online catalog. Please find the complete data in the user documentation. Our general terms of use for downloads are valid.



Multiband omnidirectional antenna for wall or mast mounting, 0.6 GHz ... 6 GHz, gain: 3 dBi ... 7 dBi, degree of protection: IP66, connection: SMA (male), incl. 5 m connecting cable, mounting bracket, and mast clamps

Your advantages

- Ideally suited for freely mobile or stationary applications in 2G/3G/4G/5G cellular networks
- Future-proof, thanks to the use of lead-free materials
- Including 5 m connection cable

Commercial data

Item number	2702273
Packing unit	1 pc
Minimum order quantity	1 pc
Sales key	DN23
Product key	DNC4Z1
GTIN	4055626070186
Weight per piece (including packing)	416.9 g
Weight per piece (excluding packing)	372 g
Customs tariff number	85177100
Country of origin	GB

Technical data

Notes

Note on application

Note on application	Only for industrial use

Product properties

Product type	Antenna
Radiation characteristics	Omnidirectional
Gain	4 dBi (617 MHz ... 960 MHz)
	3 dBi (1.7 GHz ... 2.7 GHz)
	5 dBi (3.4 GHz ... 3.8 GHz)
	7 dBi (4.9 GHz ... 6.0 GHz)
Vertical beamwidth	52 ° (850 MHz)
	39 ° (2.1 GHz)
	51 ° (3.5 GHz)
	39 ° (5.5 GHz)
Horizontal beamwidth	360 °
Polarization	Linear vertical

Electrical properties

Frequency band	700 MHz
	800 MHz
	850 MHz
	900 MHz
	1700 MHz
	1800 MHz
	1900 MHz
	2100 MHz
	2600 MHz
	3600 MHz
Frequency range	617 MHz ... 960 MHz
	1.7 GHz ... 6 GHz
Impedance	50 Ω
Maximum capacity	10.00 W
Voltage standing wave ratio VSWR in a 50 Ω system	≤ 2.50

Connection data

Connection technology

Connection method	SMA (male)

Dimensions

Dimensional drawing	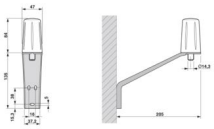
Height	82 mm
Diameter	48 mm

Material specifications

Color	black (RAL 9005)
Material (Radom)	Acrylonitrile styrene acrylate
Material (Base plate)	Aluminum
Flammability rating according to UL 94	HB
Outer sheath, material	CS29 (Ultra-Low Loss)

Cable/line

Cable length	5.00 m
Connecting cable	yes
External cable diameter	5.00 mm
Outer sheath, material	CS29 (Ultra-Low Loss)
Smallest bending radius, fixed installation	25 mm
Other resistance	UV-resistant in accordance with UL746C, f1 (Use in outdoor installations)

Environmental and real-life conditions

Ambient conditions

Degree of protection	IP66
Ambient temperature (operation)	-40 °C ... 85 °C
Ambient temperature (storage/transport)	-40 °C ... 85 °C
Wind velocity	220 km/h

Standards and regulations

Other resistance	UV-resistant in accordance with UL746C, f1 (Use in outdoor installations)

Mounting

Mounting type	Panel mounting
	Mast mounting

Drawings

Dimensional drawing

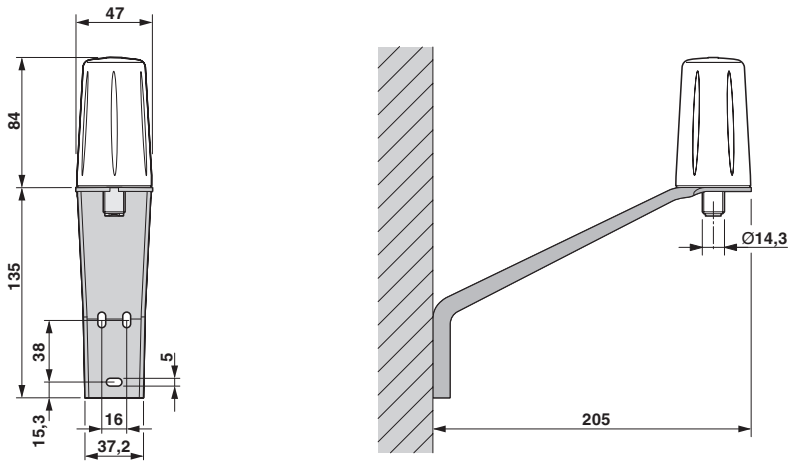

Panel mounting

Schematic diagram

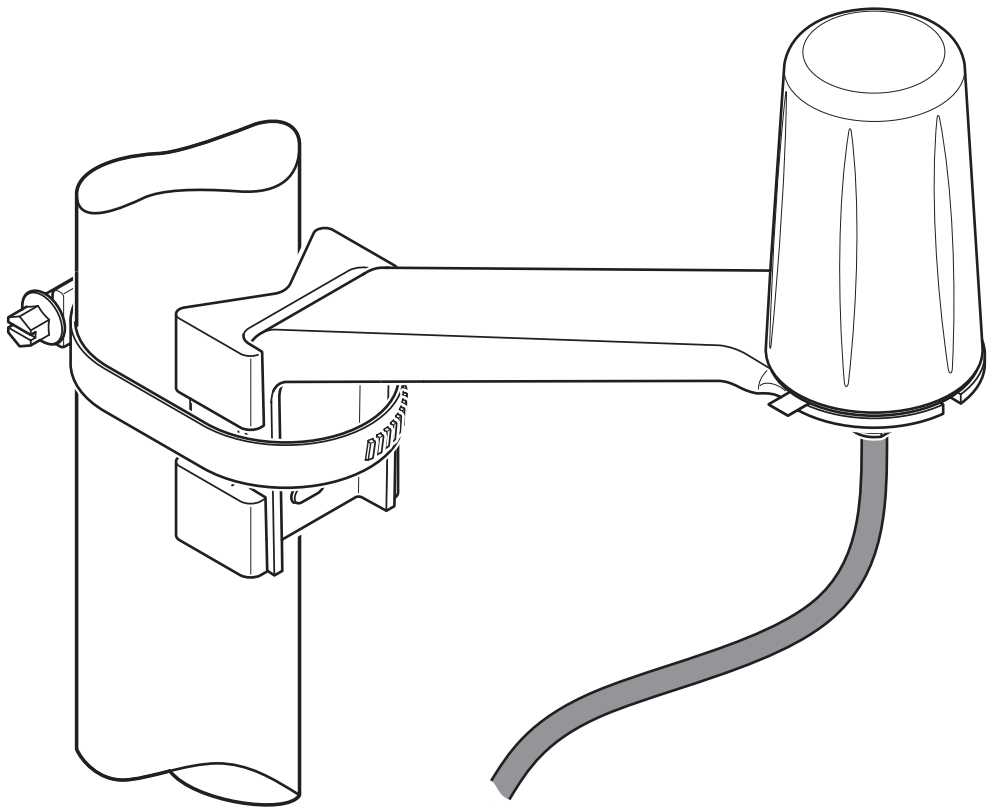

Mast mounting

Schematic diagram

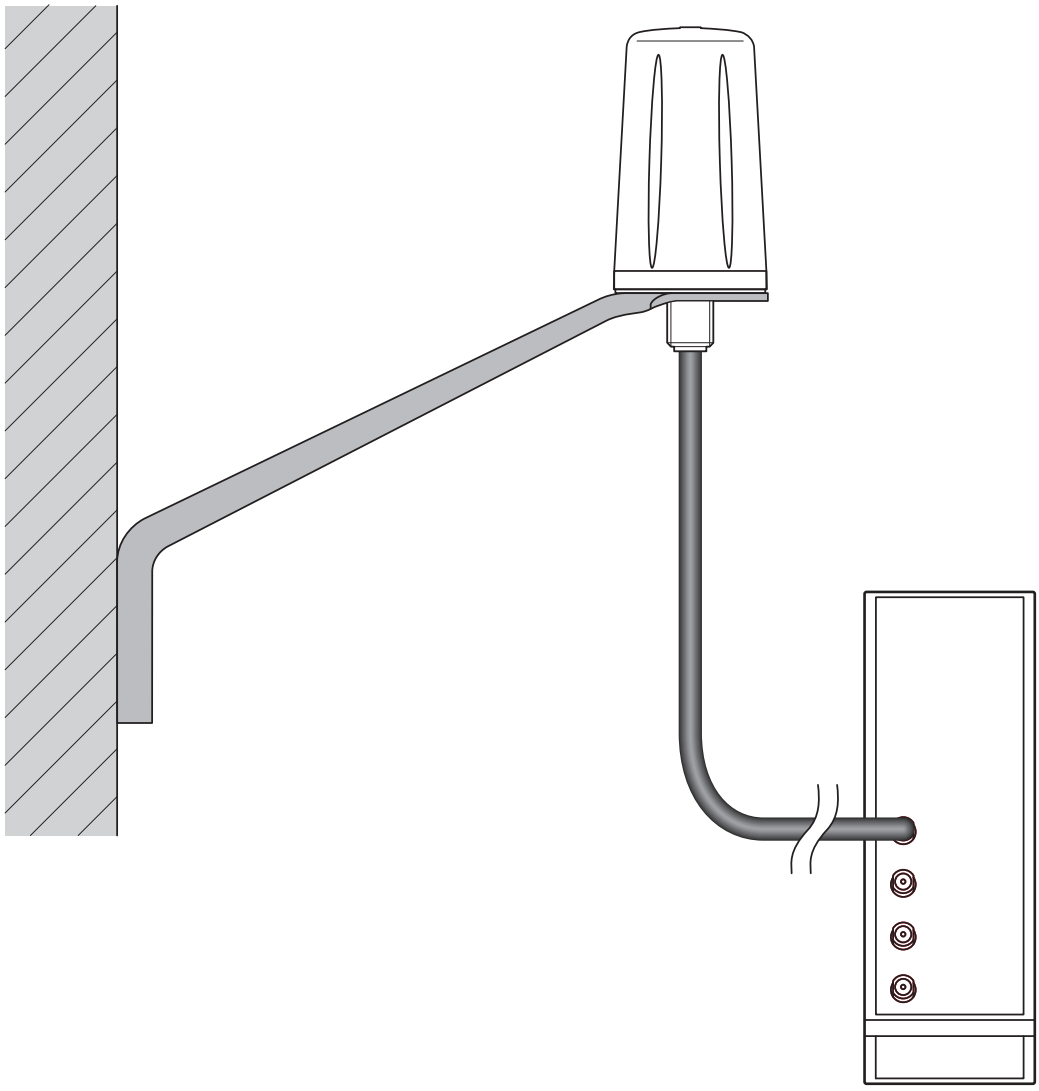

Installation example

Classifications

ECLASS

ECLASS-13.0	19070105

ETIM

ETIM 9.0	EC001698

UNSPSC

UNSPSC 21.0	43223100

Environmental product compliance

EU RoHS

Fulfills EU RoHS substance requirements	Yes, No exemptions

China RoHS

Environment friendly use period (EFUP)	EFUP-E
	No hazardous substances above the limits

EU REACH SVHC

REACH candidate substance (CAS No.)	No substance above 0.1 wt%

Phoenix Contact 2026 © - all rights reserved
https://www.phoenixcontact.com

Phoenix Contact USA
586 Fulling Mill Road
Middletown, PA 17057, United States
(+717) 944-1300
info@phoenixcon.com