TC EXTENDER 6004 ETH-2S - Ethernet extender

2702255

https://www.phoenixcontact.com/us/products/2702255

Please be informed that the data shown in this PDF document is generated from our online catalog. Please find the complete data in the user documentation. Our general terms of use for downloads are valid.



Managed Ethernet extender, point-to-point, line and ring structures, data rates up to 30 Mbps, distances of up to 20 km on in-house copper cables, replaceable surge protection, 2 SHDSL ports, 4-port switch, diagnostics via display and Ethernet

Your advantages

- Distances up to 20 km
- Up to 15.3 Mbps in 2-wire operation
- Up to 30 Mbps in 4-wire operation
- Robust modulation method (SHDSL)
- Automatic topology and data rate detection
- Transparent transmission of all standard Ethernet protocols, including EtherNet/IP™, Modbus/TCP, PROFINET, PROFIsafe, EtherCAT®, KNX, BACnet/IP
- Network transparent (no IP configuration required)
- Automatic detection of network cable type (auto MDI(X))
- Easy startup, plug and play
- 2 digital outputs for alerting external controllers
- Remote diagnostics via IP and automatic event messages via SNMP
- Use in point-to-point, line, and ring topologies with managed and unmanaged Ethernet extenders
- Integrated surge protection of the SHDSL interface
- Virtually separate critical IP networks with VLAN
- Increase availability through RSTP redundancy

ELEKTROGERÄTE RÜCKNAHME

Commercial data

Item number	2702255
Packing unit	1 pc

Minimum order quantity	1 pc
Sales key	DN24
Product key	DNC442
GTIN	4055626055541
Weight per piece (including packing)	800 g
Weight per piece (excluding packing)	766 g
Customs tariff number	85176200
Country of origin	DE

Technical data

Notes

Note on application

Note on application	Only for industrial use

Utilization restriction

CCCex note	Use in potentially explosive areas is not permitted in China.

Product properties

Product type	Ethernet extender
MTTF	506 Years (SN 29500 standard, temperature 25°C, operating cycle 21%)
	260 Years (SN 29500 standard, temperature 40°C, operating cycle 34.25%)
	110 Years (SN 29500 standard, temperature 40°C, operating cycle 100%)

Functions

IP parameterization	Static IP address
	DHCP client
	BootP (Delivery state: alternately BootP / DHCP)
Basic functions	Ethernet extenders in accordance with ITU-T G.991.2
Management functions	Web-based management (Access to all managed and unmanaged Ethernet extenders of the segment unit, role-based user management)
	SNMPv2/v3
Diagnostic functions	Web-based access to all managed and unmanaged Ethernet extenders of the segment unit
	SNMP traps
	Port mirroring
Filter functions	Extended Multicast Filtering
	VLAN
Redundancy functions	RSTP
	Proprietary SHDSL redundancy protocol (Managed and unmanaged Ethernet extenders)

Security functions

Basic functions	Ethernet extenders in accordance with ITU-T G.991.2

System properties

System limits

Number of supported devices	≤ 50 (Per SHDSL segment unit)

Functionality

Basic functions	Ethernet extenders in accordance with ITU-T G.991.2

Electrical properties

Electrical isolation	VCC // Ethernet // DSL (A) // DSL (B) // FE
Maximum power dissipation for nominal condition	4.8 W
Mains type	Permanent line
Test voltage data interface/power supply	500 V AC (In accordance with EN/IEC 60079-7, observe the limitations in the specific conditions of use.)
	1.5 kV AC (50 Hz, 1 min.)

Supply

Supply voltage range	10 V DC ... 60 V DC
Nominal supply voltage	24 V DC ±5 %
Typical current consumption	200 mA (24 V DC)
	90 mA (60 V DC)
	450 mA (10 V DC)

Function

Status and diagnostic indicators	Display for warning, status and device information

Output data

Signal

Output name	Digital output
Number of outputs	2
Voltage output signal	10 V DC ... 60 V DC (24 V DC, depending on the operating voltage)
Current output signal	≤ 500 mA (Short-circuit-proof)

Connection data

Supply

Connection method	Push-in spring connection

Interfaces

Signal	Ethernet
Web server	yes
Basic functions	Ethernet extenders in accordance with ITU-T G.991.2

Data: Ethernet interface, 10/100Base-T(X) in accordance with IEEE 802.3

Serial transmission speed	10/100 Mbps, auto negotiation
Connection method	RJ45 jack, shielded
	4 ports 10/100BaseT(X), auto negotiation and autocrossing
No. of channels	4
Transmission length	< 100 m (shielded twisted pair)
Protocols supported	IPv4, IPv6, TCP/IP, HTTP, HTTPS
Auxiliary protocols	ARP, DHCP (Client), PING, SNMP

Data: SHDSL interface according to ITU-T G.991.2.bis

Serial transmission speed	4-wire operation: 64 kbps ... 30 Mbps
	2-wire operation: 32 kbps ... 15.3 Mbps
Connection method	Push-in spring connection
No. of channels	2 (2-wire operation)
Transmission length	< 20 km (Depending on data rate and cable cross section)
Single conductor/terminal point, rigid	0.2 mm² ... 1.5 mm²
Single-wire/terminal point, flexible	0.2 mm² ... 2.5 mm²
Single-wire/terminal point, rigid AWG max.	16
Single-wire/terminal point, rigid AWG min.	24
Stripping length	10 mm

Dimensions

Width	60 mm
Height	130 mm
Depth	160 mm

Material specifications

Color (Housing)	white aluminium (RAL 9006)
Material (Housing)	Aluminum
	Sheet steel DC01

Mechanical tests

Vibration resistance in accordance with EN 60068-2-6/IEC 60068-2-6	Operation: 5g, 10...150 Hz, 2.5 h, in XYZ direction
Shock in accordance with EN 60068-2-27/IEC 60068-2-27	Operation: 15g

Environmental and real-life conditions

Ambient conditions

Degree of protection	IP20
Ambient temperature (operation)	-25 °C ... 60 °C
	-25 °C ... 0 °C (Display inactivity can occur, image changes may take several seconds)
	55 °C ... 60 °C (Display contrast can deteriorate)
Ambient temperature (storage/transport)	-40 °C ... 85 °C
Altitude	≤ 2500 m (For restrictions, see the manufacturer's declaration for altitude operation)
Max. permissible relative humidity (operation)	< 60 % (At an ambient operating temperature >70 °C)
Permissible humidity (operation)	10 % ... 95 % (non-condensing)
Permissible humidity (storage/transport)	10 % ... 95 % (non-condensing)

Approvals

CE

Certificate	CE-compliant

ATEX

Identification	II 3 G Ex ec IIC T4 Gc
Certificate	PxCIF16ATEX2702253X
Note	Please follow the special installation instructions in the documentation!

UL, USA/Canada

Identification	508 Listed

Corrosive gas test

Identification	ISA-S71.04-1985 G3 Harsh Group A

EMC data

Electromagnetic compatibility	Conformance with EMC Directive 2014/30/EU

Electrostatic discharge

Standards/regulations	EN 61000-4-2

Electrostatic discharge

Contact discharge	± 6 kV
Discharge in air	± 8 kV
Indirect discharge	± 6 kV
Comments	Criterion B

Electromagnetic HF field

Standards/regulations	EN 61000-4-3

Electromagnetic HF field

Frequency range	80 MHz ... 3 GHz
Field intensity	10 V/m
Comments	Criterion A

Fast transients (burst)

Standards/regulations	EN 61000-4-4

Fast transients (burst)

Input	± 2 kV
Signal	± 2 kV
Comments	Criterion B

Surge current load (surge)

Standards/regulations	EN 61000-4-5

Surge current load (surge)

Input	± 0.5 kV (Symmetrical, unshielded supply line)
	± 1 kV (Asymmetrical, unshielded supply line)
Output	± 1 kV (asymmetrical, unshielded)
Signal	± 1 kV (asymmetrical, shielded Ethernet cable)
	± 4 kV (asymmetrical: line to ground, unshielded SHDSL cable)
	± 2 kV (symmetrical: line to line, unshielded SHDSL cable)

Comments	Criterion B

Conducted interference

Standards/regulations	EN 61000-4-6

Conducted interference

Frequency range	0.15 MHz ... 80 MHz
Comments	Criterion A
Voltage	10 V

Emitted interference

Standards/regulations	EN 55011
Comments	Class A, industrial applications

Criteria

Criterion A	Normal operating behavior within the specified limits.
Criterion B	Temporary impairment to operational behavior that is corrected by the device itself.

Standards and regulations

Standards/regulations	EN 50121-4
Standard designation	Railway applications

Mounting

Mounting type	DIN rail mounting
Assembly note	The product can be snapped onto all 35 mm DIN rails in accordance with EN 60715.
Useable DIN rail type	DIN rail: 35 mm

Drawings

Connection diagram

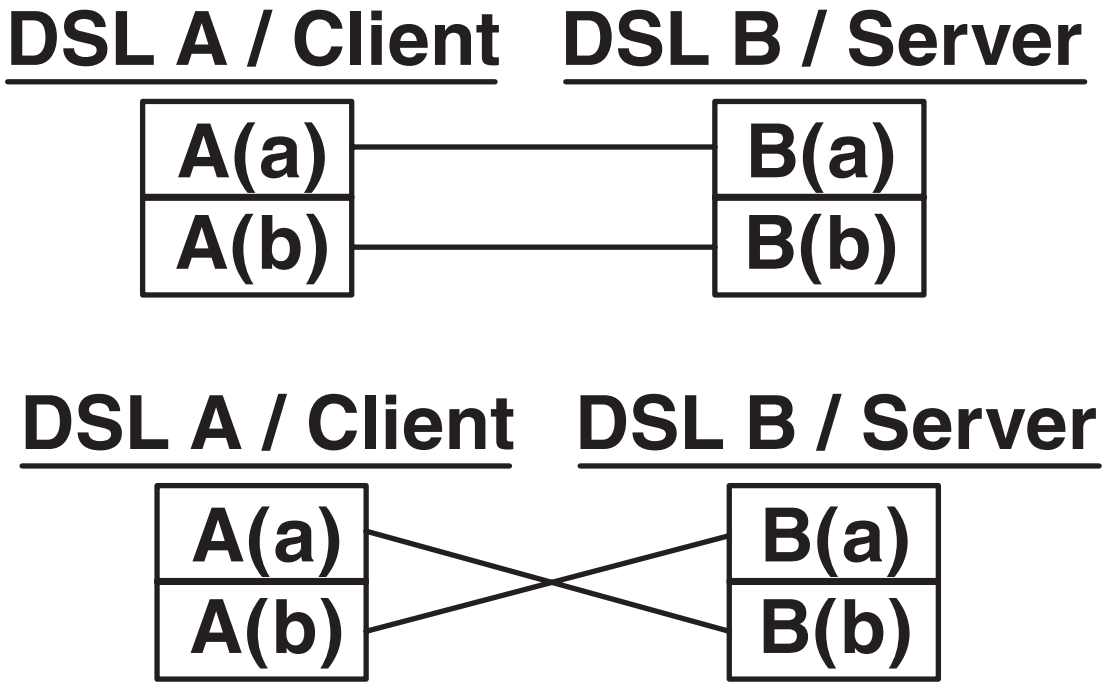

DSL connection

Schematic diagram

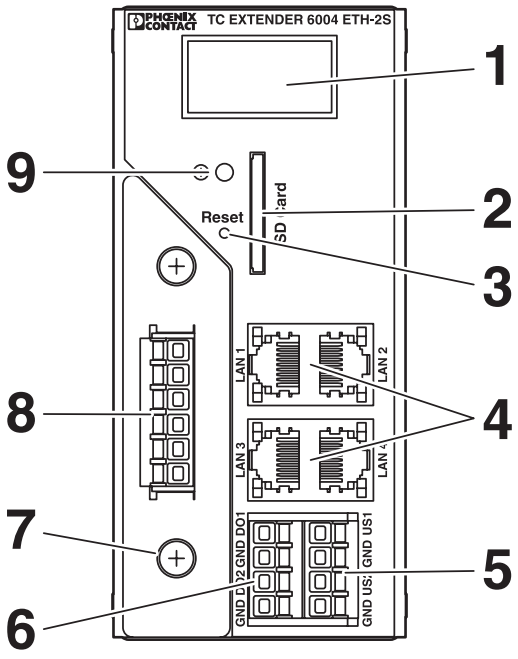

Front view

Schematic diagram

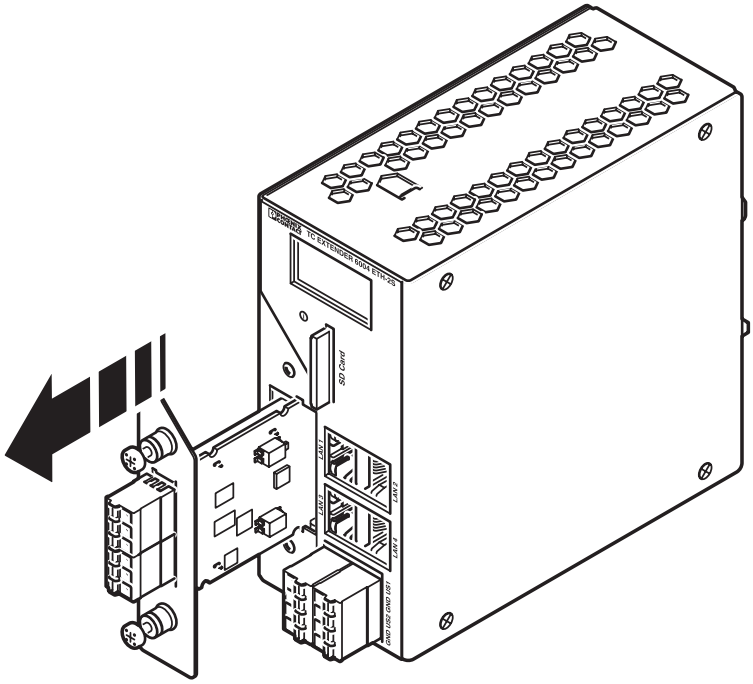

Replacement of protection module

Schematic diagram

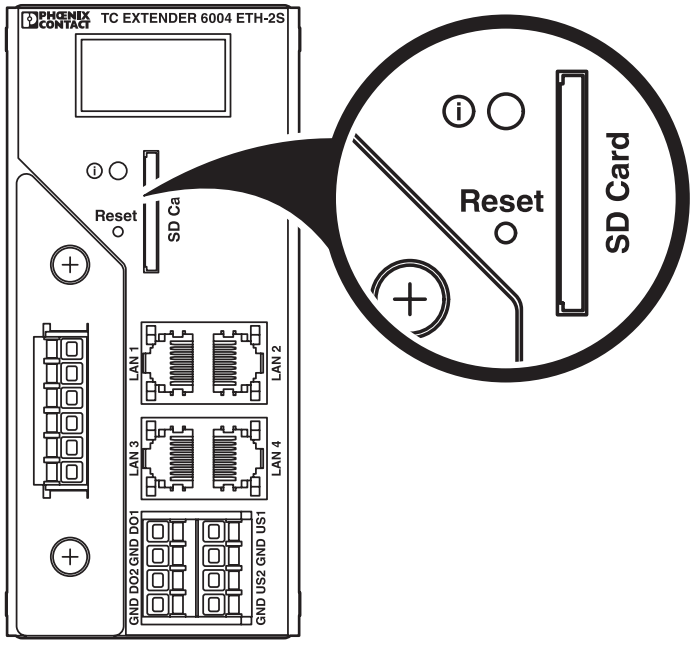

Reset button

Schematic diagram

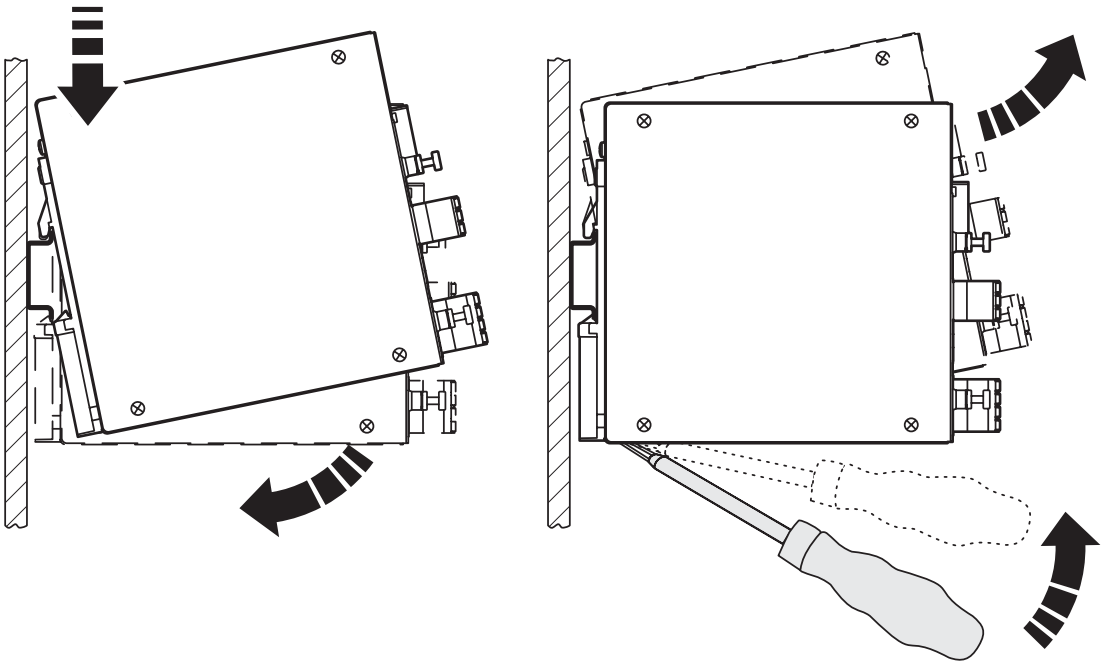

Mounting and removing

Schematic diagram

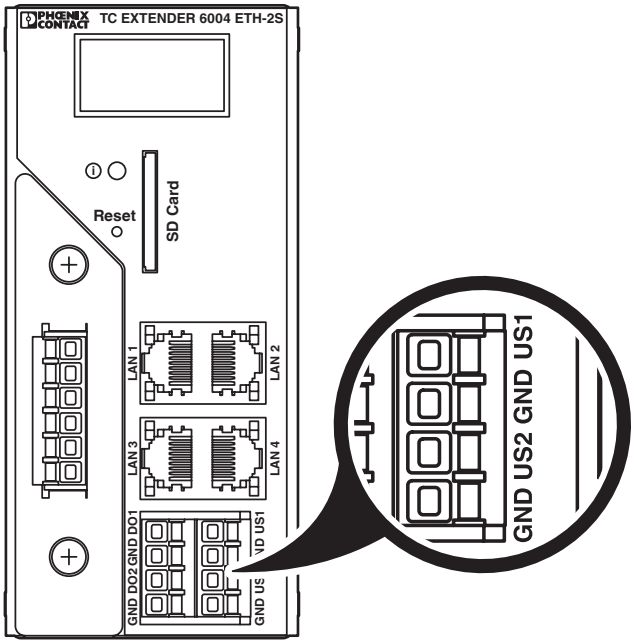

Power supply

Schematic diagram

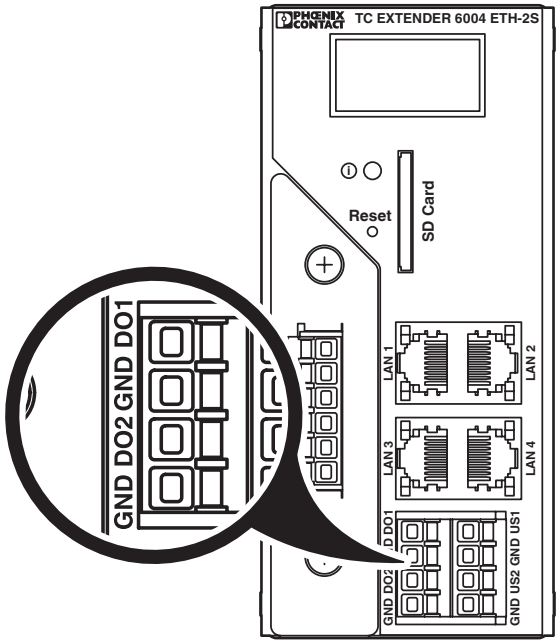

Digital switching outputs

Circuit diagram

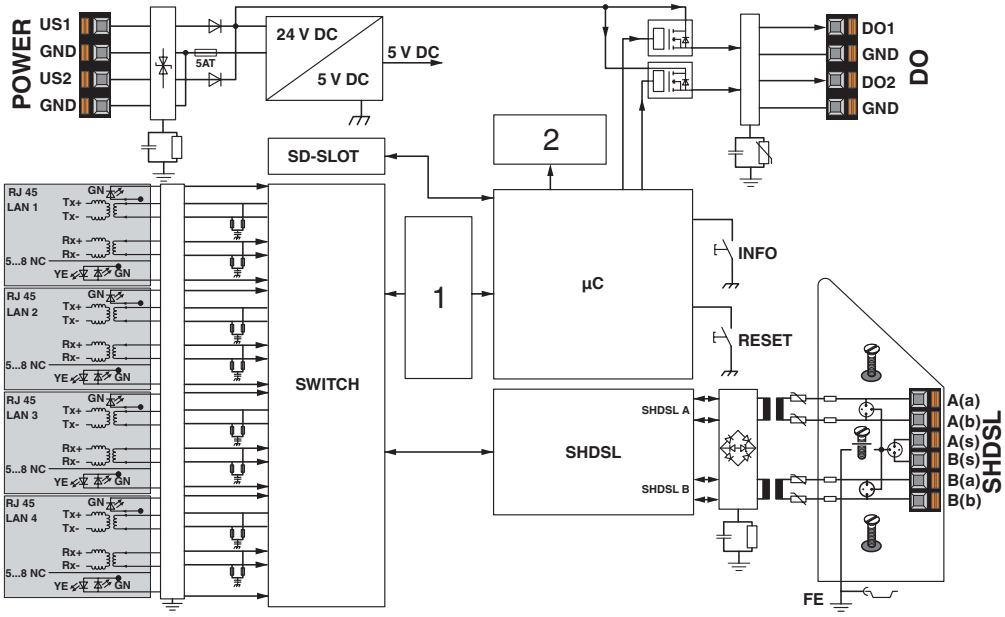

Basic circuit diagram

Approvals

To download certificates, visit the product detail page: https://www.phoenixcontact.com/us/products/2702255

cULus Listed
Approval ID: E238705

Classifications

ECLASS

ECLASS-13.0	19170407
ECLASS-15.0	19170407

ETIM

ETIM 10.0	EC000309

UNSPSC

UNSPSC 21.0	43223100

Environmental product compliance

EU RoHS

Fulfills EU RoHS substance requirements	Yes
Exemption	6(c), 7(a), 7(c)-I

China RoHS

Environment friendly use period (EFUP)	EFUP-50
	An article-related China RoHS declaration table can be found in the download area for the respective article under "Manufacturer declaration". For all articles with EFUP-E, no China RoHS declaration table issued and required.

EU REACH SVHC

REACH candidate substance (CAS No.)	Lead(CAS: 7439-92-1)
	2,2',6,6'-tetrabromo-4,4'-isopropylidenediphenol(CAS: 79-94-7)
SCIP	6d3f7619-f145-402c-80f9-7033bb3ff389

EF3.1 Climate Change

CO2e kg	50.585 kg CO2e

Phoenix Contact 2026 © - all rights reserved
https://www.phoenixcontact.com

Phoenix Contact USA
586 Fulling Mill Road
Middletown, PA 17057, United States
(+717) 944-1300
info@phoenixcon.com