AXL F BK PN - Bus coupler

2701815

https://www.phoenixcontact.com/us/products/2701815

Please be informed that the data shown in this PDF document is generated from our online catalog. Please find the complete data in the user documentation. Our general terms of use for downloads are valid.



Axioline F, Bus coupler, PROFINET, RJ45 jack, transmission speed in the local bus: 100 Mbps, degree of protection: IP20, including bus base module and Axioline F connector

Product description

The bus coupler is intended for use within a PROFINET network. The bus coupler creates the link to the Axioline F I/O system and the industrial I/O signals connected to it. Up to 63 Axioline F devices can be connected to the bus coupler. Device descriptions for Phoenix Contact controllers are integral parts of the engineering tools PC Worx and PLCnext Engineer. Corresponding GSDML files are available for integrating the Axioline F station into other programming systems. These files can be downloaded at: www.phoenixcontact.com/product/2701815

Your advantages

- 2 Ethernet ports (with integrated switch)
- Conformance with PROFINET specification V2.2
- Supports PROFIsafe
- PROFINET RT and IRT
- Minimum cycle time of PROFINET for RT and IRT is 250 µs
- Firmware can be updated
- Runtime in bus coupler is negligible (almost 0 µs)
- Typical cycle time of the Axioline F local bus is around 10 µs
- Web-based management
- Supports the operation of Axioline Smart Elements
- Supports Diag+
- Safe analog value processing with SAFE AI and other components

ELEKTROGERÄTE RÜCKNAHME

Commercial data

Item number	2701815
Packing unit	1 pc
Minimum order quantity	1 pc
Sales key	DR02
Product key	DRI21A
GTIN	4046356845601
Weight per piece (including packing)	229.4 g
Weight per piece (excluding packing)	222 g
Customs tariff number	85176200
Country of origin	DE

Technical data

Dimensions

Dimensional drawing	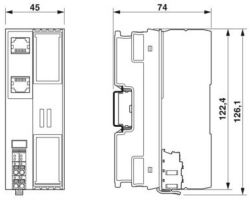
Width	45 mm
Height	126.1 mm
Depth	74 mm
Note on dimensions	The depth applies when a TH 35-7.5 DIN rail is used (in accordance with EN 60715).

Notes

Note on application

Note on application	Only for industrial use

Mounting

Mounting type	DIN rail mounting
Mounting position	any (observe temperature derating)

Material specifications

Color (Housing)	gray (RAL 7042)

Interfaces

Supported protocols	PROFINET
	TFTP
	PTCP
	LLDP
	SNMP
	MRP
	DCP
	DDI
	BootP (BootP only to perform firmware updates)

PROFINET

Number of interfaces	2
Connection method	RJ45 jack
Note on the connection method	Auto negotiation and autocrossing
Transmission speed	100 Mbps (full duplex)
Transmission physics	Ethernet in RJ45 twisted pair

Axioline F local bus

Number of interfaces	1
Connection method	Bus base module
Transmission speed	100 Mbps

Service

Number of interfaces	1
Connection method	Micro USB type B

System properties

System limits

Amount of process data (Input data)	max. 262 Byte
Amount of process data (Output data)	max. 262 Byte
Number of supported devices	max. 63 (per station)
Number of local bus devices that can be connected	max. 63

PROFINET

Device function	PROFINET device
Specification	Version 2.2
Conformance Class	Conformance Class C
Device ID	1000_{hex}
Vendor ID	$00B0_{hex}$

Programming data

Register length (master)	1484 Byte

Product properties

Product type	I/O component
Product family	Axioline F
Type	block modular
Mounting position	any (observe temperature derating)
Scope of supply	including bus base module and Axioline F connector

Insulation characteristics

Overvoltage category	II (IEC 60664-1, EN 60664-1)
Pollution degree	2 (IEC 60664-1, EN 60664-1)

Electrical properties

Maximum power dissipation for nominal condition	3.7 W

Potentials: Communications power U_L feed-in (the supply of the Axioline F local bus U_{Bus} is generated from U_L)

Supply voltage	24 V DC
Supply voltage range	19.2 V DC ... 30 V DC (including all tolerances, including ripple)
Current draw	max. 570 mA (2.0 A on U_{Bus}, U_L = 24 V)
Current consumption	typ. 105 mA (without I/O modules, U_L = 24 V)
Protective circuit	Surge protection; electronic

	Reverse polarity protection; electronic

Potentials: Axioline F local bus supply (U_{Bus})

Supply voltage	5 V DC (via bus base module)
Power supply unit	max. 2 A

Electrical isolation/isolation of the voltage ranges

Test voltage: PROFINET interface 1 / PROFINET interface 2	1500 V AC, 50 Hz, 1 min
Test voltage: PROFINET interface 1 / 24 V communications voltage (U_L) feed-in	1500 V AC, 50 Hz, 1 min
Test voltage: PROFINET interface 2 / 24 V communications voltage (U_L) feed-in	1500 V AC, 50 Hz, 1 min
Test voltage: PROFINET interface 1 / functional ground	1500 V AC, 50 Hz, 1 min
Test voltage: PROFINET interface 2 / functional ground	1500 V AC, 50 Hz, 1 min
Test voltage: 24 V communications voltage (U_L) feed-in / functional ground	500 V AC, 50 Hz, 1 min

Connection data

Connection technology

Connection name	Axioline F connector
Note on the connection method	Please observe the information provided on conductor cross-sections in the “Axioline F: system and installation” user manual.

Axioline F connector

Connection method	Push-in connection
Note on the connection method	Please observe the information provided on conductor cross-sections in the “Axioline F: system and installation” user manual.
Conductor cross-section, rigid	0.2 mm² ... 1.5 mm²
Conductor cross-section, flexible	0.2 mm² ... 1.5 mm²
Conductor cross-section AWG	24 ... 16
Stripping length	8 mm

Environmental and real-life conditions

Ambient conditions

Ambient temperature (operation)	-25 °C ... 60 °C (Mounting position: panel mounting on horizontal DIN rail)
	-25 °C ... 55 °C (Mounting position: any)
Degree of protection	IP20
Air pressure (operation)	70 kPa ... 106 kPa (up to 3000 m above sea level)
Air pressure (storage/transport)	70 kPa ... 106 kPa (up to 3000 m above sea level)
Ambient temperature (storage/transport)	-40 °C ... 85 °C
Permissible humidity (operation)	5 % ... 95 % (non-condensing)
Permissible humidity (storage/transport)	5 % ... 95 % (non-condensing)

Mechanical test

Vibration resistance in accordance with EN 60068-2-6/IEC 60068-2-6	5g

Shock in accordance with EN 60068-2-27/IEC 60068-2-27	30g
Continuous shock in accordance with EN 60068-2-27/IEC 60068-2-27	10g

Standards and regulations

Protection class	III (IEC 61140, EN 61140, VDE 0140-1)

Drawings

Dimensional drawing

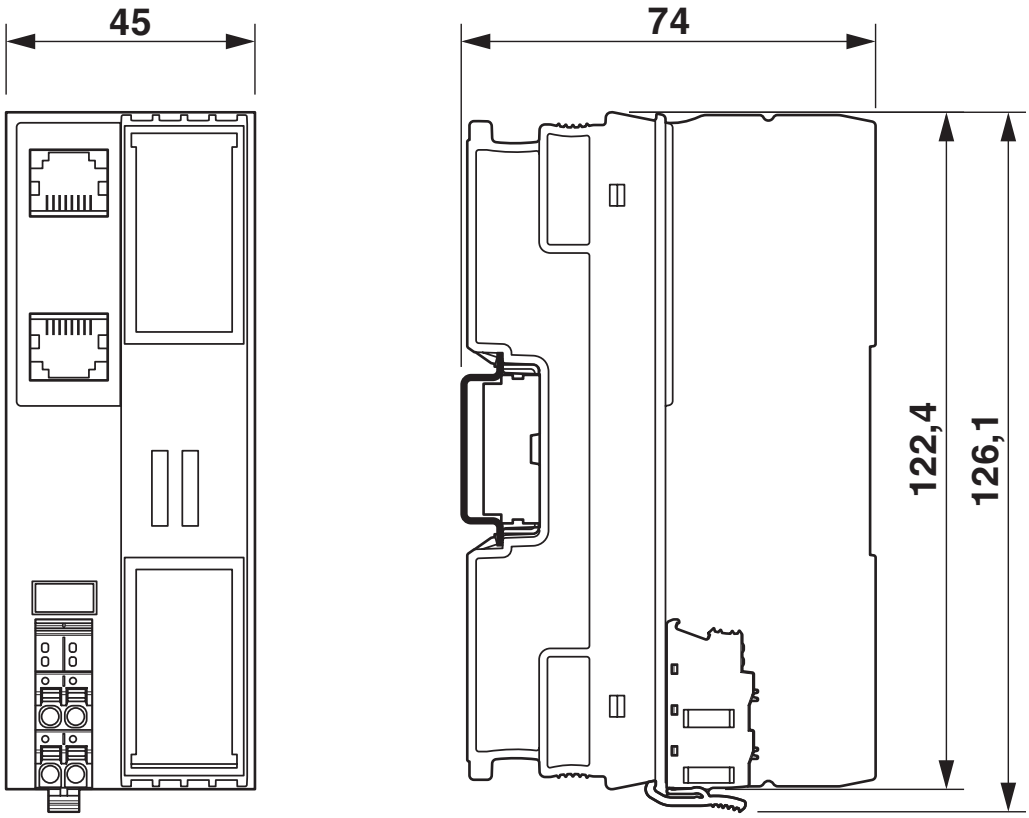

Connection diagram

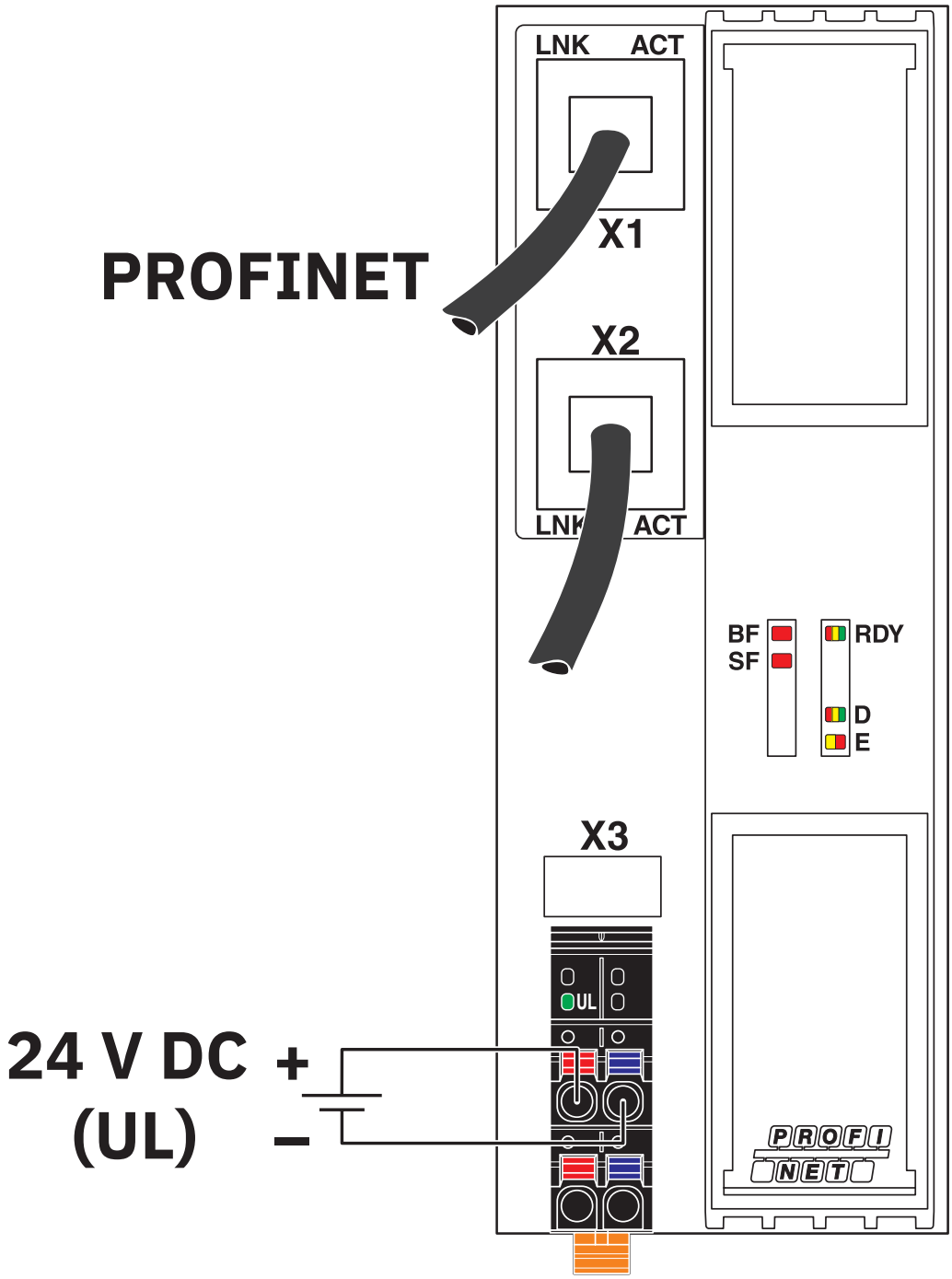

Connection of the cables

Block diagram

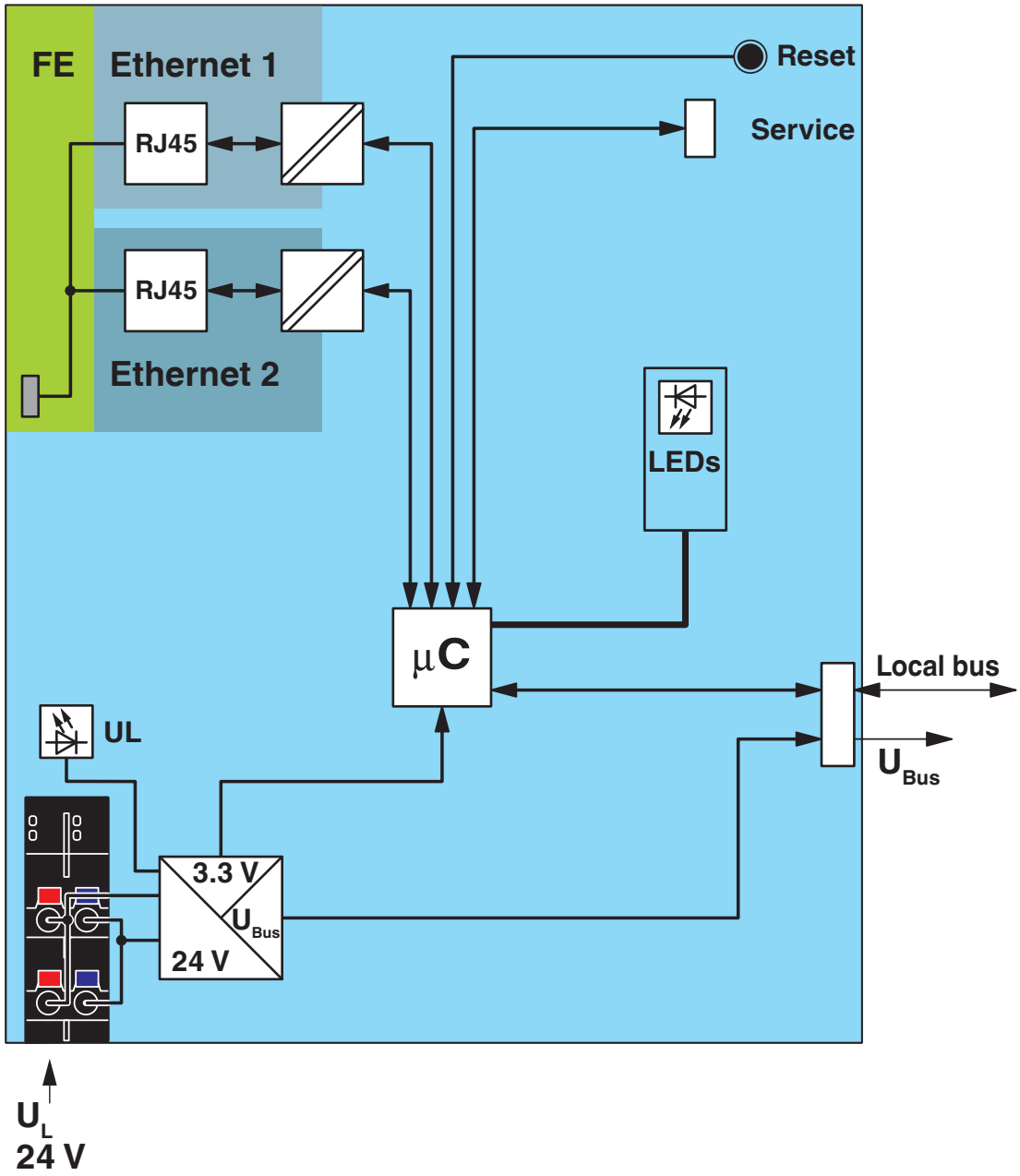

Internal wiring of the terminal points

Approvals

To download certificates, visit the product detail page: https://www.phoenixcontact.com/us/products/2701815

DNV GL
Approval ID: TAA00000DF

LR
Approval ID: LR2480202TA-02

RINA
Approval ID: ELE008423XG001

PROFINET
Approval ID: Z10813

cULus Listed
Approval ID: E238705

FS Thermoprocess
Approval ID: 968 INS 799.01 25

Classifications

ECLASS

ECLASS-13.0	27242608

ETIM

ETIM 9.0	EC001604

UNSPSC

UNSPSC 21.0	32151600

Environmental product compliance

EU RoHS

Fulfills EU RoHS substance requirements	Yes
Exemption	7(a), 7(c)-I

China RoHS

Environment friendly use period (EFUP)	EFUP-50
	An article-related China RoHS declaration table can be found in the download area for the respective article under "Manufacturer declaration". For all articles with EFUP-E, no China RoHS declaration table issued and required.

EU REACH SVHC

REACH candidate substance (CAS No.)	4,4'-isopropylidenediphenol(CAS: 80-05-7)
	Lead(CAS: 7439-92-1)
SCIP	71362d30-0f63-4d4a-af8b-36ac330d47c3

EF3.1 Climate Change

CO2e kg	39.87 kg CO2e

Phoenix Contact 2026 © - all rights reserved
https://www.phoenixcontact.com

Phoenix Contact USA
586 Fulling Mill Road
Middletown, PA 17057, United States
(+717) 944-1300
info@phoenixcon.com