FL EPA RMS - DIN rail adapter

2701133

https://www.phoenixcontact.com/us/products/2701133

Please be informed that the data shown in this PDF document is generated from our online catalog. Please find the complete data in the user documentation. Our general terms of use for downloads are valid.

Set for mounting devices with EPA design on a DIN rail



Commercial data

Item number	2701133
Packing unit	1 pc
Minimum order quantity	1 pc
Sales key	DN23
Product key	DNN2WZ
GTIN	4046356712378
Weight per piece (including packing)	199.3 g
Weight per piece (excluding packing)	199.3 g
Customs tariff number	73269098
Country of origin	DE

Technical data

Notes

Note on application

Note on application	Only for industrial use

Product properties

Product type	DIN rail adapter

Material specifications

Color	white aluminium (RAL 9006)

Drawings

Schematic diagram

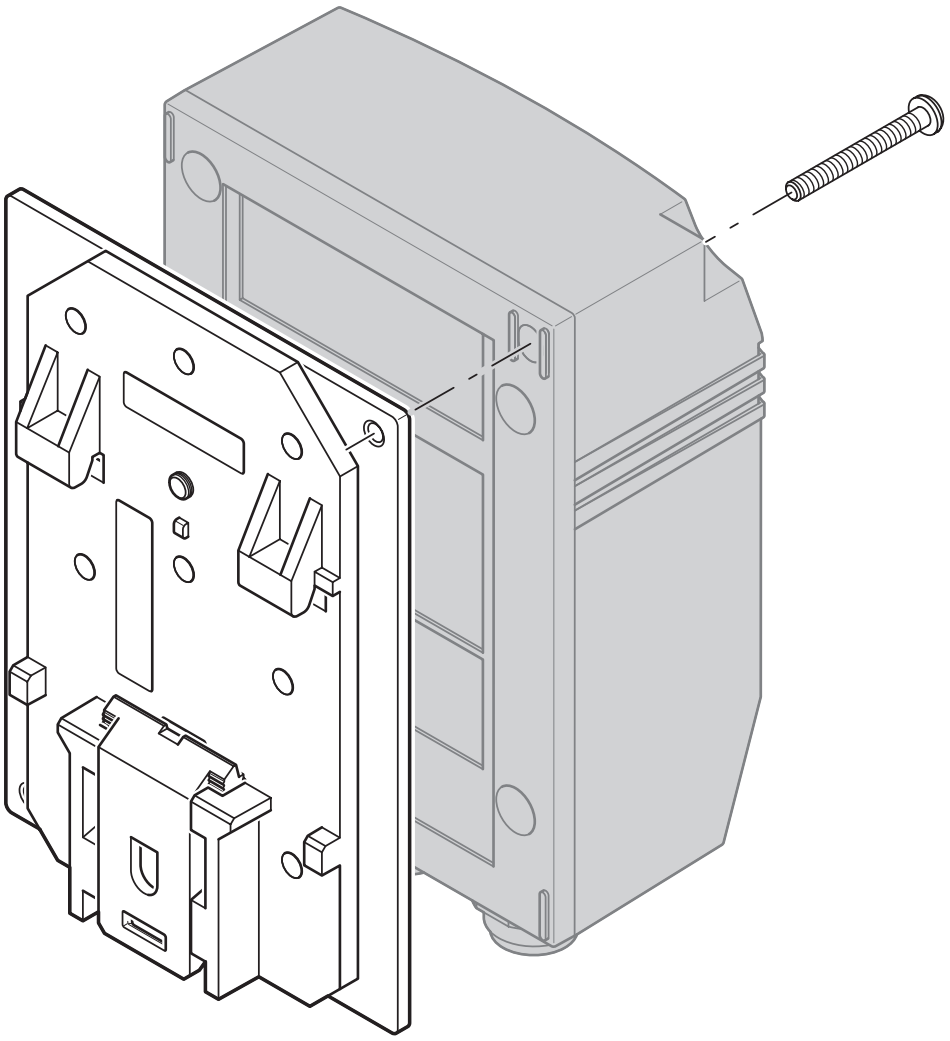

Classifications

ECLASS

ECLASS-13.0	27141190
ECLASS-15.0	27141190

ETIM

ETIM 10.0	EC002848

UNSPSC

UNSPSC 21.0	39121400

Environmental product compliance

EU RoHS

Fulfills EU RoHS substance requirements	Not applicable, No electrical and electronic equipment (EEE), cannot be used in EEE

EU REACH SVHC

REACH candidate substance (CAS No.)	No substance above 0.1 wt%

EF3.1 Climate Change

CO2e kg	0.487 kg CO2e

Phoenix Contact 2026 © - all rights reserved
https://www.phoenixcontact.com

Phoenix Contact USA
586 Fulling Mill Road
Middletown, PA 17057, United States
(+717) 944-1300
info@phoenixcon.com