PSD-S ME B-M - Mounting material

2700164

https://www.phoenixcontact.com/us/products/2700164

Please be informed that the data shown in this PDF document is generated from our online catalog. Please find the complete data in the user documentation. Our general terms of use for downloads are valid.



Foot for tube Ø 25 mm, aluminium, black

Commercial data

Item number	2700164
Packing unit	1 pc
Minimum order quantity	1 pc
Sales key	DR07
Product key	DRL117
GTIN	4046356491532
Weight per piece (including packing)	109.4 g
Weight per piece (excluding packing)	109.4 g
Customs tariff number	76169990
Country of origin	DE

Technical data

Notes

Note on application

Note on application	Only for industrial use

Product properties

Product type	Assembly element
Product family	PSD-S
Scope of supply	1 x terminal block screw (Allen screw) 1 x seal
	1 x terminal block screw (Allen screw) 1 x seal

Dimensions

Dimensional drawing	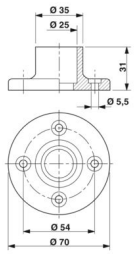
Height	31 mm
Diameter	70 mm

Material specifications

Color	black (RAL 9005)
Material	Anodized aluminum

Environmental and real-life conditions

Ambient conditions

Degree of protection	IP66 (as of item revision 02)
Ambient temperature (operation)	-30 °C ... 60 °C

Mounting

Mounting type	Screw mounting (Seal enclosed)
Mounting position	any

Drawings

Dimensional drawing

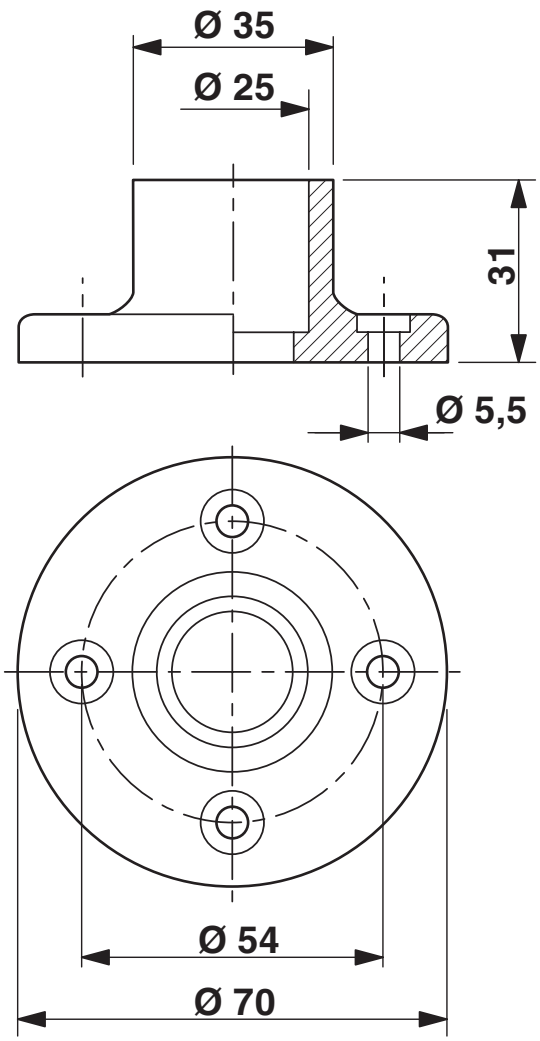

Classifications

ECLASS

ECLASS-13.0	27371235
ECLASS-15.0	27371235

ETIM

ETIM 10.0	EC001154

UNSPSC

UNSPSC 21.0	43221500

Environmental product compliance

EU RoHS

Fulfills EU RoHS substance requirements	Yes, No exemptions

China RoHS

Environment friendly use period (EFUP)	EFUP-E
	No hazardous substances above the limits

EU REACH SVHC

REACH candidate substance (CAS No.)	No substance above 0.1 wt%

EF3.1 Climate Change

CO2e kg	1.907 kg CO2e

Phoenix Contact 2026 © - all rights reserved
https://www.phoenixcontact.com

Phoenix Contact USA
586 Fulling Mill Road
Middletown, PA 17057, United States
(+717) 944-1300
info@phoenixcon.com