PSD-S ME BR-SM - Mounting bracket

2700144

https://www.phoenixcontact.com/us/products/2700144

Please be informed that the data shown in this PDF document is generated from our online catalog. Please find the complete data in the user documentation. Our general terms of use for downloads are valid.



Angle for floor mounting, black

Your advantages

- One-sided assembly for up to 5 signal elements
- Without concealed cable routing

Commercial data

Item number	2700144
Packing unit	1 pc
Minimum order quantity	1 pc
Sales key	DR07
Product key	DRL117
GTIN	4046356491365
Weight per piece (including packing)	44 g
Weight per piece (excluding packing)	42.7 g
Customs tariff number	39269097
Country of origin	DE

Technical data

Notes

Note on application

Note on application	Only for industrial use

Product properties

Product type	Assembly element
Product family	PSD-S
Scope of supply	2 x plastic screw 1 x cable threaded joint 1 x nut
	2 x plastic screw 1 x cable threaded joint 1 x nut

Dimensions

Dimensional drawing	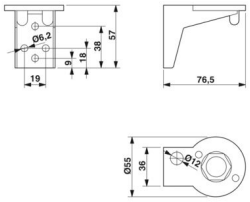
Width	76.5 mm
Height	57 mm
Diameter	55 mm

Material specifications

Color	black (RAL 9005)
Material	PA A3 x 2G5

Environmental and real-life conditions

Ambient conditions

Degree of protection	IP66
Ambient temperature (operation)	-30 °C ... 50 °C

Mounting

Mounting type	Screw mounting (Seal enclosed)
Mounting position	any

Drawings

Dimensional drawing

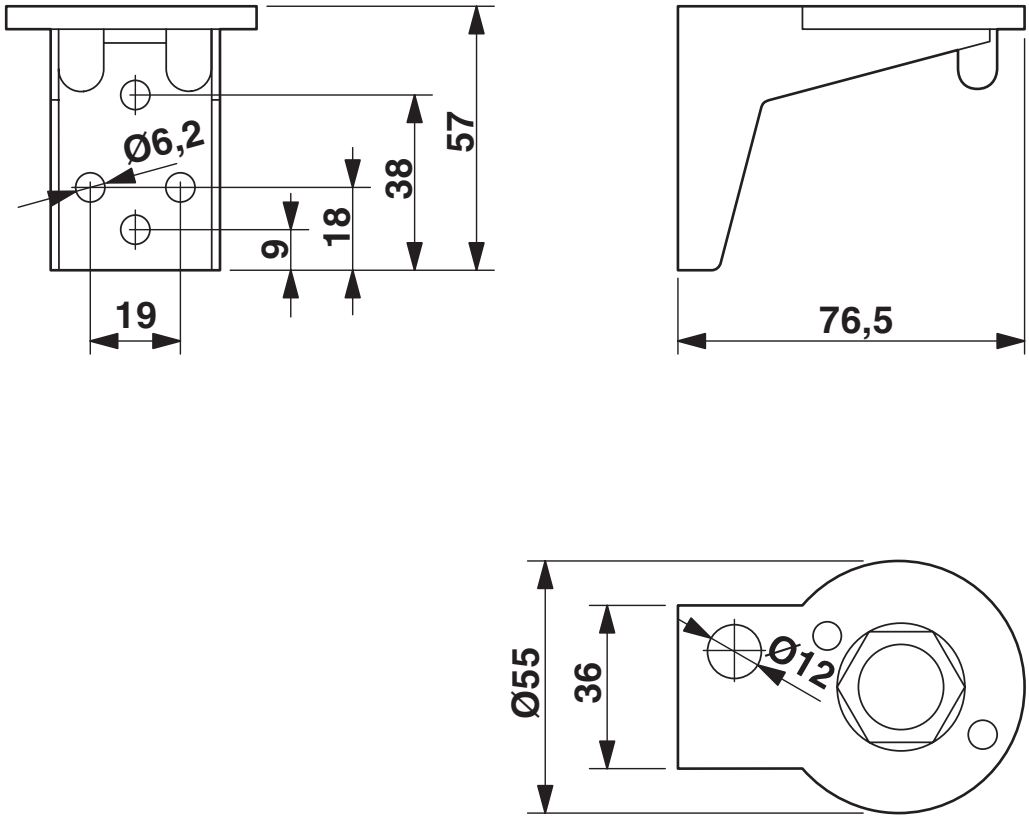

Classifications

ECLASS

ECLASS-13.0	27371233
ECLASS-15.0	27371233

ETIM

ETIM 10.0	EC001153

UNSPSC

UNSPSC 21.0	46171600

Environmental product compliance

EU RoHS

Fulfills EU RoHS substance requirements	Yes, No exemptions

China RoHS

Environment friendly use period (EFUP)	EFUP-E
	No hazardous substances above the limits

EU REACH SVHC

REACH candidate substance (CAS No.)	No substance above 0.1 wt%

EF3.1 Climate Change

CO2e kg	1.074 kg CO2e

Phoenix Contact 2026 © - all rights reserved
https://www.phoenixcontact.com

Phoenix Contact USA
586 Fulling Mill Road
Middletown, PA 17057, United States
(+717) 944-1300
info@phoenixcon.com