AXL F AI4 I 1H - Analog module

2688491

https://www.phoenixcontact.com/us/products/2688491

Please be informed that the data shown in this PDF document is generated from our online catalog. Please find the complete data in the user documentation. Our general terms of use for downloads are valid.

CRA-READY



Axioline F, Analog input module, Analog inputs: 4, 0 mA ... 20 mA, 4 mA ... 20 mA, -20 mA ... 20 mA, connection technology: 2-, 3-, 4-conductor, transmission speed in the local bus: 100 Mbps, integrated sensor supply, degree of protection: IP20, including bus base module and Axioline F connectors; The product is being prepared for compliance with the Cyber Resilience Act (CRA).

Product description

The module is designed for use within an Axioline F station. It is used to acquire analog current signals.

Your advantages

- 4 analog, bipolar input channels for the connection of current signals
- Connection of sensors in 2-, 3-, and 4-conductor technology
- Current ranges: 0 mA ... 20 mA, 4 mA ... 20 mA, ±20 mA
- Simultaneous scanning of all channels by means of simultaneous sampling
- High crosstalk attenuation between the channels, thanks to separate signal paths
- Particularly robust against electromagnetic interference
- Device rating plate stored

ELEKTROGERÄTE RÜCKNAHME

Commercial data

Item number	2688491

Packing unit	1 pc
Minimum order quantity	1 pc
Sales key	DR02
Product key	DRI241
GTIN	4046356744225
Weight per piece (including packing)	187 g
Weight per piece (excluding packing)	122.22 g
Customs tariff number	85389091
Country of origin	DE

Technical data

Dimensions

Dimensional drawing	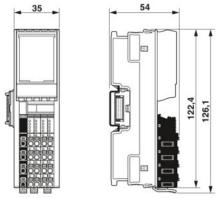
Width	35 mm
Height	126.1 mm
Depth	54 mm
Note on dimensions	The depth applies when a TH 35-7.5 DIN rail is used (in accordance with EN 60715).

Notes

Note on application	Only for industrial use
Note on application	As things stand now, we are preparing the product so that, as of December 11, 2027, it will comply with the requirements of the EU Cyber Resilience Act (CRA) based on the information currently available regarding the CRA.

Mounting

Mounting type	DIN rail mounting
Mounting position	any (no temperature derating)

Material specifications

Color (Housing)	gray (RAL 7042)

Interfaces

Axioline F local bus

Number of interfaces	2
Connection method	Bus base module
Transmission speed	100 Mbps

System properties

Programming data

Input address area	8 Byte
Output address area	0 Byte

Fieldbus data telegram (PROFIBUS)

Required parameter data	7 Byte
Required configuration data	6 Byte

Input data

Analog:

Input name	Analog inputs
Description of the input	Differential inputs, current
Number of inputs	4
Connection method	Push-in connection
Connection technology	2-, 3-, 4-conductor
Note regarding the connection technology	shielded, twisted pair
Process data update	160 µs
A/D conversion time	31.25 µs
A/D converter resolution	16 bit
Limit frequency (3 dB)	30 Hz
	12 kHz
Wire-break behavior	Going to 0 mA; open-circuit detection from 4 mA ... 20 mA
Protective circuit	Transient protection of inputs; Suppressor diode
	Overload protection of the inputs; No; ±5.2 V DC, maximum, I_{max} = 50 mA
Measured value representation	16 bits (15 bits + sign bit)
Data formats	IB IL, S7-compatible
Current input signal	0 mA ... 20 mA
	4 mA ... 20 mA
	-20 mA ... 20 mA
Input resistance current input	104 Ω (typical)
Tolerance, absolute (V)	see tables for tolerance values
Tolerance, relative	typ. 0.1 % (of upper range value for active mean value generation and 30 Hz filter)
	see tables for tolerance values
Input filter	30 Hz, 12 kHz and mean value generation (can be parameterized)

Product properties

Product type	I/O component
Product family	Axioline F
Type	block modular
Mounting position	any (no temperature derating)
Scope of supply	including bus base module and Axioline F connectors
Special properties	The product is being prepared for compliance with the Cyber Resilience Act (CRA)
	integrated sensor supply

Insulation characteristics

Overvoltage category	II (IEC 60664-1, EN 60664-1)
Pollution degree	2 (IEC 60664-1, EN 60664-1)

Electrical properties

Maximum power dissipation for nominal condition	2 W

Potentials: Axioline F local bus supply (U_{Bus})

Supply voltage	5 V DC (via bus base module)
Current draw	max. 150 mA (up to HW 03)
	max. 60 mA (from HW 04)
	typ. 120 mA (up to HW 03)
	typ. 53 mA (from HW 04)

Potentials: Supply for analog modules (U_A)

Supply voltage	24 V DC (I/O supply and sensor supply)
Supply voltage range	19.2 V DC ... 30 V DC (including all tolerances, including ripple)
Current draw	max. 245 mA (I_{iS} = 4 x 50 mA (full load), up to HW 03)
	max. 238 mA (I_{iS} = 4 x 50 mA (full load), from HW 04)
	typ. 34 mA (I_{iS} = 0 mA, from HW 04)
	max. 45 mA (I_{iS} = 0 mA, up to HW 03)
	max. 38 mA (I_{iS} = 0 mA, from HW 04)
	typ. 238 mA (I_{iS} = 4 x 50 mA (full load), up to HW 03)
	typ. 234 mA (I_{iS} = 4 x 50 mA (full load), from HW 04)
Current consumption	typ. 38 mA (I_{iS} = 0 mA, up to HW 03)
Protective circuit	Surge protection; electronic (35 V, 0.5 s)
	Reverse polarity protection; up to HW 02: polarity protection diodefrom HW 03: parallel diode; with external 5 A fuse (for startup only)
	Transient protection; Suppressor diode

Supply:

Designation	Sensor supply U_{iS}
Supply voltage	24 V DC (from U_A)
Current consumption	max. 50 mA (per channel)

Electrical isolation/isolation of the voltage ranges

Test voltage: 5 V supply of the local bus (U_{Bus}) / 24 V supply (I/Os)	500 V AC, 50 Hz, 1 min
Test voltage: 5 V supply of the local bus (U_{Bus}) / analog inputs	500 V AC, 50 Hz, 1 min
Test voltage: 5 V supply of the local bus (U_{Bus}) / functional ground	500 V AC, 50 Hz, 1 min
Test voltage: 24 V supply (I/O) / analog inputs	500 V AC, 50 Hz, 1 min
Test voltage: 24 V supply (I/O) / functional ground	500 V AC, 50 Hz, 1 min
Test voltage: Analog inputs / functional ground	500 V AC, 50 Hz, 1 min

Connection data

Connection technology

Connection name	Axioline F connector

Note on the connection method	Please observe the information provided on conductor cross-sections in the “Axioline F: system and installation” user manual.

Axioline F connector

Connection method	Push-in connection
Note on the connection method	Please observe the information provided on conductor cross-sections in the “Axioline F: system and installation” user manual.
Conductor cross-section, rigid	0.2 mm² ... 1.5 mm²
Conductor cross-section, flexible	0.2 mm² ... 1.5 mm²
Conductor cross-section AWG	24 ... 16
Stripping length	8 mm

Environmental and real-life conditions

Ambient conditions

Ambient temperature (operation)	-25 °C ... 60 °C
Degree of protection	IP20
Air pressure (operation)	70 kPa ... 106 kPa (up to 3000 m above sea level)
Air pressure (storage/transport)	70 kPa ... 106 kPa (up to 3000 m above sea level)
Ambient temperature (storage/transport)	-40 °C ... 85 °C
Permissible humidity (operation)	5 % ... 95 % (non-condensing)
Permissible humidity (storage/transport)	5 % ... 95 % (non-condensing)

Mechanical test

Vibration resistance in accordance with EN 60068-2-6/IEC 60068-2-6	5g
Shock in accordance with EN 60068-2-27/IEC 60068-2-27	30g
Continuous shock in accordance with EN 60068-2-27/IEC 60068-2-27	10g

Standards and regulations

Protection class	III (IEC 61140, EN 61140, VDE 0140-1)

Drawings

Dimensional drawing

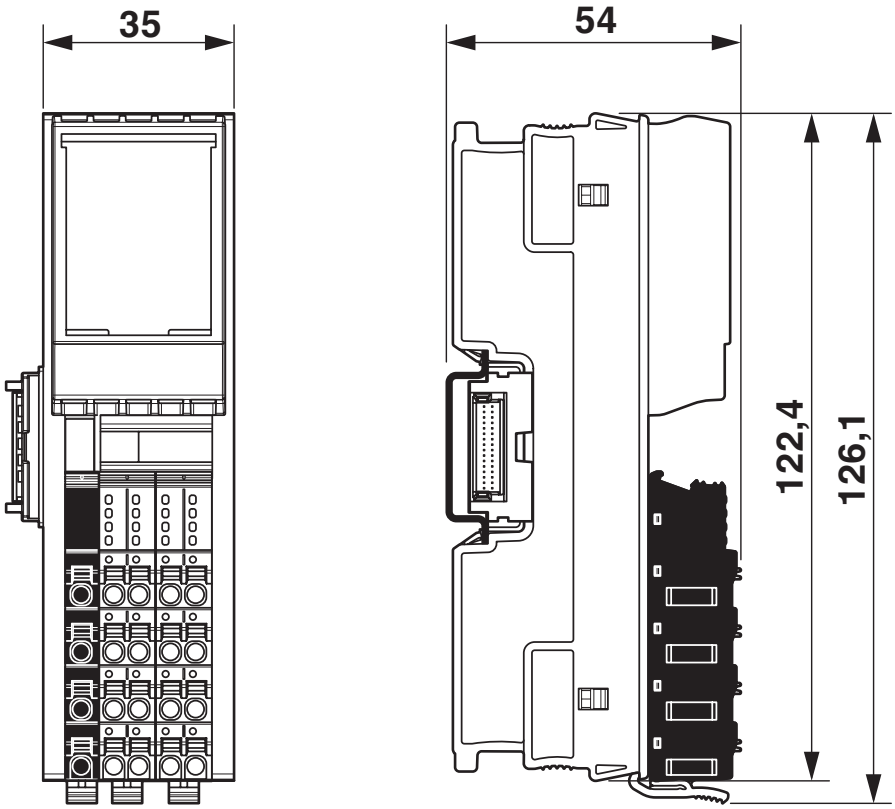

Connection diagram

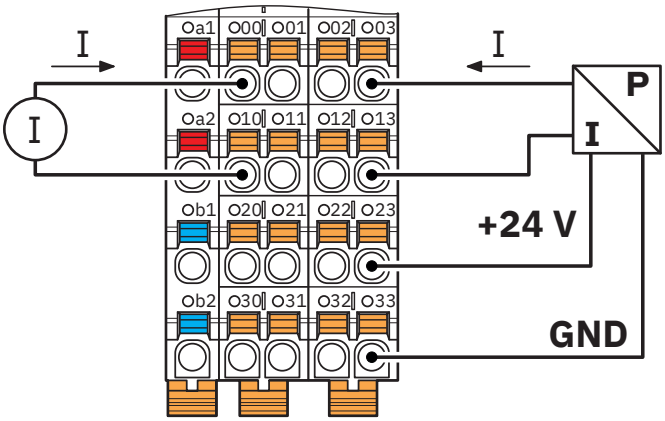

Connection for current measurment

Connection diagram

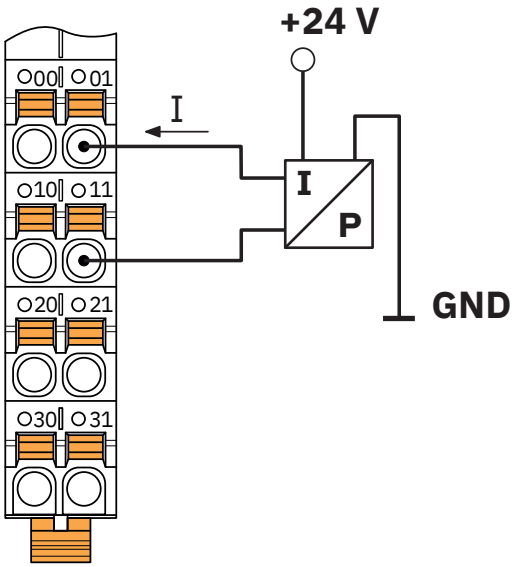

Active pressure sensor at a differential current input

Connection diagram

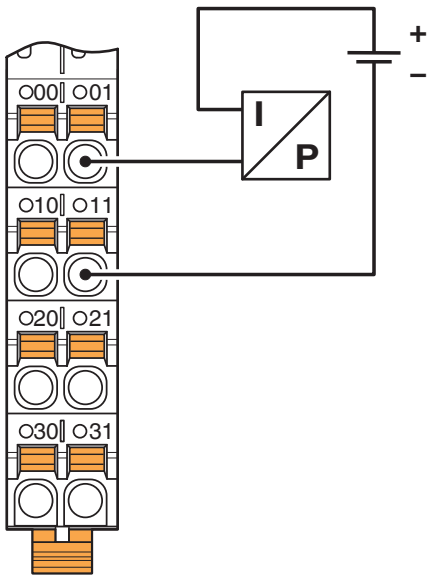

Differential current input with passive 2-conductor transmitter (current loop)

Connection diagram

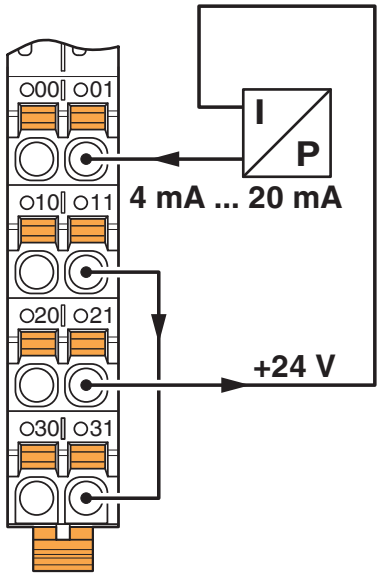

Differential current input with passive 2-conductor transmitter (current loop)

Block diagram

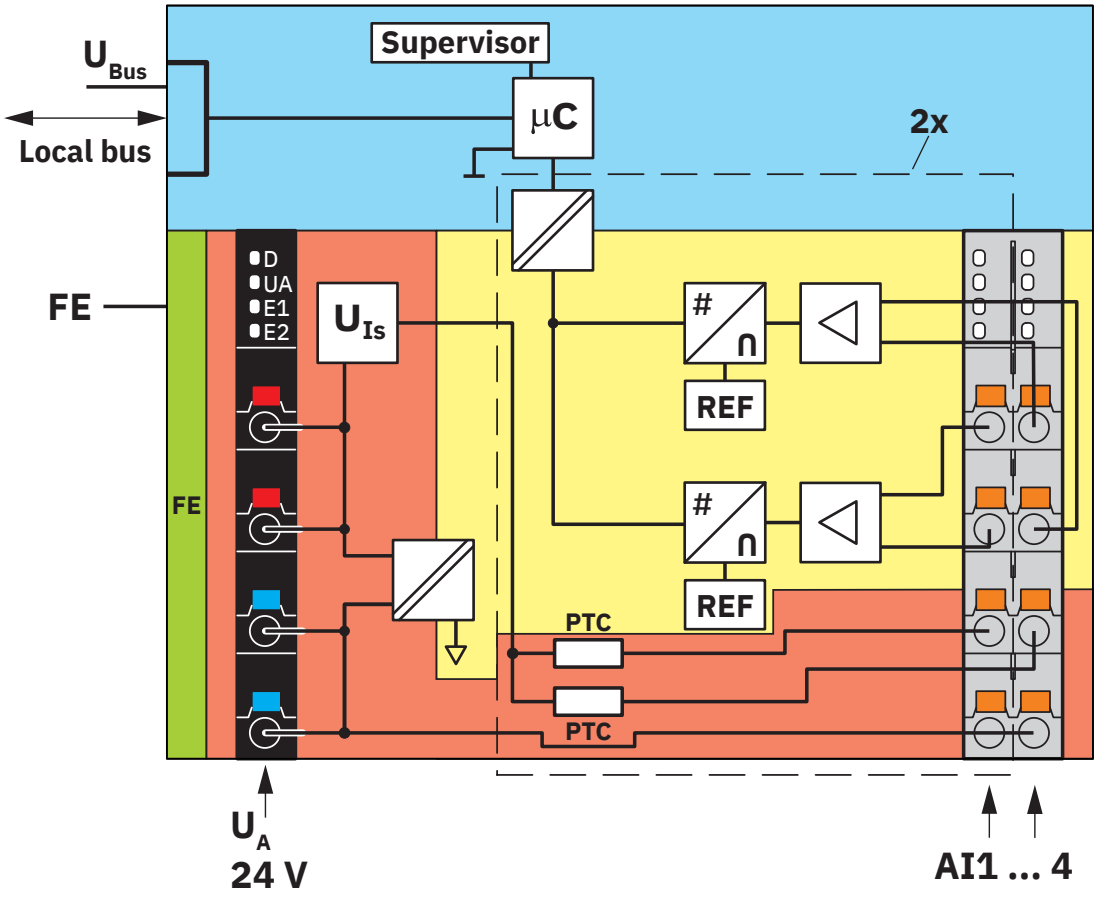

Internal wiring of the terminal points

Approvals

To download certificates, visit the product detail page: https://www.phoenixcontact.com/us/products/2688491

DNV GL
Approval ID: TAA00000DF

LR
Approval ID: LR2480202TA-02

BSH
Approval ID: 840c

RINA
Approval ID: ELE008423XG001

ABS
Approval ID: 23-2449604-PDA

cULus Listed
Approval ID: E238705

cULus Listed
Approval ID: E238705

Classifications

ECLASS

ECLASS-13.0	27242601
ECLASS-15.0	27242601

ETIM

ETIM 10.0	EC001596

UNSPSC

UNSPSC 21.0	32151600

Environmental product compliance

EU RoHS

Fulfills EU RoHS substance requirements	Yes
Exemption	7(a), 7(c)-I, 7(c)-II

China RoHS

Environment friendly use period (EFUP)	EFUP-50
	An article-related China RoHS declaration table can be found in the download area for the respective article under "Manufacturer declaration". For all articles with EFUP-E, no China RoHS declaration table issued and required.

EU REACH SVHC

REACH candidate substance (CAS No.)	Lead(CAS: 7439-92-1)
SCIP	49653ccf-3cd3-40a4-aef6-c62d1e5617d4

EF3.1 Climate Change

CO2e kg	10.04 kg CO2e

Phoenix Contact 2026 © - all rights reserved
https://www.phoenixcontact.com

Phoenix Contact USA
586 Fulling Mill Road
Middletown, PA 17057, United States
(+717) 944-1300
info@phoenixcon.com