VIP-PA-FLK50/4X14/ 6,0M/S7 - Front adapter

2322621

https://www.phoenixcontact.com/us/products/2322621

Please be informed that the data shown in this PDF document is generated from our online catalog. Please find the complete data in the user documentation. Our general terms of use for downloads are valid.



VIP VARIOFACE front adapter, with connected system cables for SMATIC S7-300, 4 x 8 channels can be connected

Your advantages

- Can be screwed on with the I/O module
- Power supply via terminal blocks with spring-cage double connection
- Encapsulated socket strips on the module side

Commercial data

Item number	2322621
Packing unit	1 pc
Minimum order quantity	1 pc
Note	Made to order (non-returnable)
Sales key	C423
Product key	DK232S
GTIN	4046356452366
Weight per piece (including packing)	1,775 g
Weight per piece (excluding packing)	1,725 g
Customs tariff number	85444290
Country of origin	DE

Technical data

Product properties

Product type	Front adapter
Product family	VARIOFACE Professional

Insulation characteristics: Air clearances and creepage distances

Insulation	Functional insulation
Overvoltage category	II
Pollution degree	2

Electrical properties

Operating voltage (AC)	≤ 30 V AC
Operating voltage (DC)	≤ 60 V DC
Current (per branch)	≤ 1 A
Current (Voltage supply)	≤ 8 A
Current (per byte)	≤ 2 A

Air clearances and creepage distances

Rated insulation voltage	63 V
Rated surge voltage	0.6 kV

Supported controller: SIEMENS S7-300 / ET 200 M

Suitable I/O card	CPU 313C
	CPU 313C-2PtP
	CPU 313C-2DP
	CPU 314C-2PtP
	CPU 314C-2DP
	6ES7321-1BL00-0AA0
	6ES7322-1BL00-0AA0
	6ES7322-8BH01-0AB0
	6ES7322-8BH10-0AB0
	6ES7323-1BL00-0AA0
	6ES7331-7NF00-0AB0
	6ES7331-7NF10-0AB0
	6ES7331-7PF01-0AB0
	6ES7331-7PF11-0AB0
	6ES7350-2AH01-0AE0
	6ES7357-4AH01-0AE0
	6ES7331-1KF02-0AB0

Connection data

Connection 1 (control level)

Connection method	Plug-in connection

Number of positions	40
Note	Can be plugged onto 40-pos. I/O modules

Connection 2 (field level)

Connection in acc. with standard	IEC 60603-13
Connection method	IDC/FLK socket strip
Number of connections	4
Number of positions	14
Insertion/withdrawal cycles	< 50
Pitch	2.54 mm

Connection 3 (supply)

Connection method	Push-in spring connection
Stripping length	10 mm
Number of connections	2
Number of positions	4
Conductor cross-section rigid	0.2 mm² ... 2.5 mm²
Conductor cross-section flexible	0.2 mm² ... 2.5 mm²
	0.25 mm² ... 2.5 mm² (Ferrule without plastic sleeve)
	0.25 mm² ... 1 mm² (Ferrule with plastic sleeve)
Conductor cross-section flexible (2 conductors with same cross section)	0.5 mm² ... 1 mm² (TWIN ferrule with plastic sleeve)
Conductor cross-section AWG	24 ... 12
Pitch	5 mm

Dimensions

Cable

Length	6 m

Cable/line

14X0.14 [PVC]

UL AWM Style	2464/1061
Number of positions	14
Shielded	no
Cable type	14X0.14 [PVC]
Conductor type	Round cable set
Conductor structure signal line	7x 0.16 mm
AWG signal line	26
Conductor cross-section	14x 0.14 mm²
Wire diameter incl. insulation	1 mm ±0.03 mm
External cable diameter	6.40 mm ±0.4 mm
Outer sheath, material	Semi-rigid PVC
External sheath, color	gray
Conductor material	Tin-plated Cu litz wires

Cable resistance	≤ 145 Ω/km (20 °C)
Insulation resistance	≥ 20 MΩ*km (20 °C)
Smallest bending radius, fixed installation	55 mm
Smallest bending radius, movable installation	104 mm
Dynamic load capacity (bending)	Max. bending cycles: 5000 (at a radius of ≥ 15x outside diameter)
Halogen-free	no
Flame resistance	IEC 60332-1-2 (raw cable)
	VDE 0842, Part 332-1-2 (raw cable)
	IEC 60332-3-22 (raw cable)
	UL VW-1
	CSA FT-1
Resistance to oil	can withstand occasional splashes (raw cable)

Environmental and real-life conditions

Ambient conditions

Degree of protection (Module)	IP20
Degree of protection (Installation location)	≥ IP54
Ambient temperature (operation)	-20 °C ... 50 °C
Ambient temperature (storage/transport)	-20 °C ... 70 °C
Altitude	≤ 2000 m

Approvals

UKCA

Certificate	UKCA-compliant

Standards and regulations

Air clearances and creepage distances

Standards/regulations	EN IEC 60664-1

Mounting

Mounting type	Plug-in mounting
Mounting position	any

Notes

Notes on operation	For proper use, the specifications of the installation directive (see Downloads) must be observed. For applications or use with third-party products, the specifications, and the safety and warning instructions of the respective third-party manufacturer must also be met.

Notes on operation	Analog I/O cards To avoid short-circuits, all wire bridges must be disconnected! No voltage supply may be supplied to the front adapter!
Notes on operation	Digital I/O cards Thanks to the existing wire bridge upon delivery, the input and output bytes are non-isolated.

Drawings

Circuit diagram

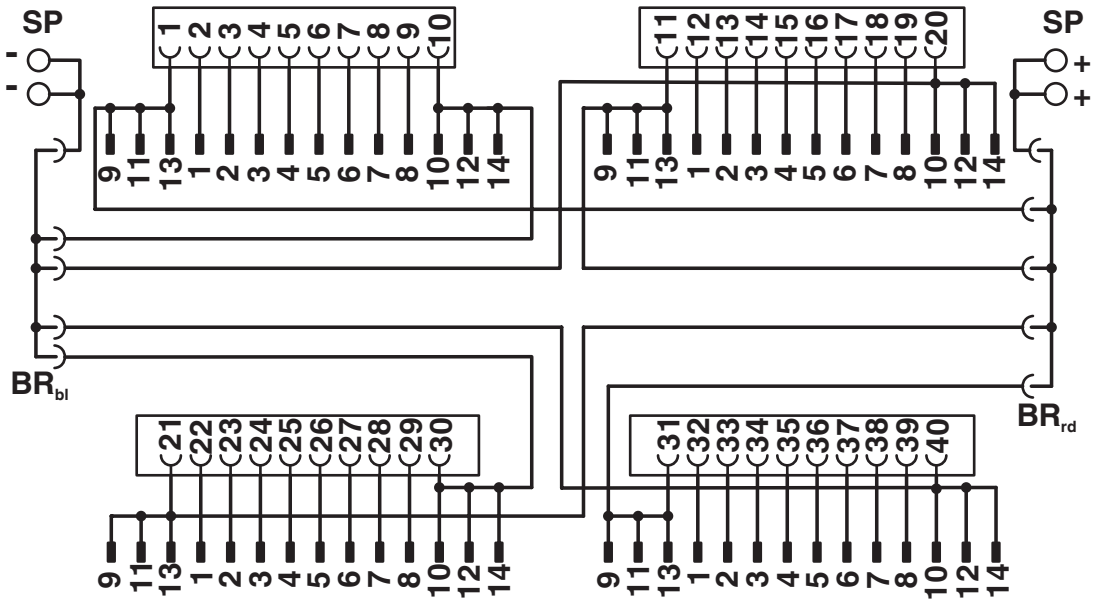

Classifications

ECLASS

ECLASS-13.0	27242292

ETIM

ETIM 9.0	EC002584

UNSPSC

UNSPSC 21.0	32151600

Environmental product compliance

EU RoHS

Fulfills EU RoHS substance requirements	Yes, No exemptions

China RoHS

Environment friendly use period (EFUP)	EFUP-E
	No hazardous substances above the limits

EU REACH SVHC

REACH candidate substance (CAS No.)	No substance above 0.1 wt%

Phoenix Contact 2026 © - all rights reserved
https://www.phoenixcontact.com

Phoenix Contact USA
586 Fulling Mill Road
Middletown, PA 17057, United States
(+717) 944-1300
info@phoenixcon.com