UPS-BAT/VRLA-WTR/24DC/26AH - Battery module

2320429

https://www.phoenixcontact.com/us/products/2320429

Please be informed that the data shown in this PDF document is generated from our online catalog. Please find the complete data in the user documentation. Our general terms of use for downloads are valid.

CRA-READY



Battery module (device with battery), lead AGM, VRLA technology 24 V DC, 26 Ah, tool-free battery change, automatic detection, and communication with QUINT UPS-IQ. Product is being prepared for compliance with the Cyber Resilience Act (CRA).

Product description

For continuous monitoring and intelligent management, there is constant communication with the QUINT UPS. Thanks to automatic detection of the battery module and tool-free switching during operation, quick installation is possible. The battery modules for QUINT UPS with IQ Technology leave the warehouse fully charged.

Your advantages

- Maximum buffer times at extreme temperatures
- Pure lead AGM technology (Absorbent Glass Mat)

ELEKTROGERÄTE RÜCKNAHME

Commercial data

Item number	2320429
Packing unit	1 pc
Minimum order quantity	1 pc
Sales key	CM24

Product key	CMUEW3
GTIN	4046356707718
Weight per piece (including packing)	22,400 g
Weight per piece (excluding packing)	22,400 g
Customs tariff number	85072080
Country of origin	US

Technical data

Notes

Note on application

Note on application	As things stand now, we are preparing the product so that, as of December 11, 2027, it will comply with the requirements of the EU Cyber Resilience Act (CRA) based on the information currently available regarding the CRA.

General

Note on the battery	This product contains a battery with a limited shelf life that must be charged every few months. The product packaging indicates when the battery must be started up or recharged. The general shelf life can be found in the energy storage devices area under “Latest startup”.

Input data

Input voltage	24 V DC
Buffer period	120 min (10 A)
	30 min (40 A)

Output data

Nominal output voltage	24 V DC
Output current I_{max}	45 A
Output fuse	2x 25 A ATOF 32V
Connection in parallel	15
Connection in series	no

Battery operation

Nominal output voltage	24 V DC
Nominal output current (I_N)	45 A

Energy storage

End-of-charge voltage	27.6 V (20 °C)
Charging current	10.4 A
Nominal capacity	26 Ah
Service life	10 Years ... 15 Years (20 °C)
Latest startup date (battery only)	12 Months (0 °C ... 20 °C)
Latest startup (battery only) - range	9 Months ... 12 Months (20 °C ... 30 °C)
	6 Months ... 9 Months (30 °C ... 40 °C)
Battery technology	VRLA-WTR
Memory medium	Pure lead AGM
Accumulator type	Genesis G26EPX
Number of cells	2
Size designation	Block
Battery pack	yes

IQ technology	Yes
Temperature sensor	yes
Suitable for fast charging	yes
Approved according to	UL Style 3321150 °C 600 V AC 750 V DC

Product properties

Product type	Battery module
Product family	Battery module (device with battery)
Application	for QUINT4 DC-UPS, QUINT4 AC-UPS, and QUINT-UPS
Disposal	Used batteries must not be thrown away with household waste, they should instead be disposed of in accordance with applicable national regulations.
IQ technology	Yes

Insulation characteristics

Protection class	III
Degree of pollution	2

Dimensions

Width	358 mm
Height	174 mm
Depth	169 mm

Installation dimensions

Installation distance right/left	0 mm / 0 mm
Installation distance top/bottom	50 mm / 50 mm

Mounting

Mounting position	Horizontally, on a mounting panel

Material specifications

Housing material	Plastic
Housing material	Metal

Cable/line

Battery connecting cable: A+/-

Cable cross section	6 mm²
Cable length	340 mm
Color	red/black

Battery connecting cable: B+/-

Cable cross section	6 mm²
Cable length	110 mm
Color	red/black

Environmental and real-life conditions

Ambient conditions

Degree of protection	IP20
Ambient temperature (operation)	-25 °C ... 60 °C
Ambient temperature (storage/transport)	-40 °C ... 60 °C
Max. permissible relative humidity (operation)	≤ 95 %
Shock	18 ms, 30g, in each space direction (according to IEC 60068-2-27)
Vibration (operation)	< 15 Hz, amplitude ±2,5 mm, 15 Hz ... 150 Hz, according to IEC 60068-2-6
	15 Hz ... 150 Hz, 2.3g, 90 min.

Standards and regulations

Standard - Electrical safety	EN 62368-1/VDE 0868-1

Approvals

Shipbuilding approval	DNV GL (EMC A), ABS
UL approvals	UL/C-UL listed UL 508
	UL/C-UL Recognized UL 60950-1

Ex data

Suited for EX-applications	no

Drawings

Block diagram

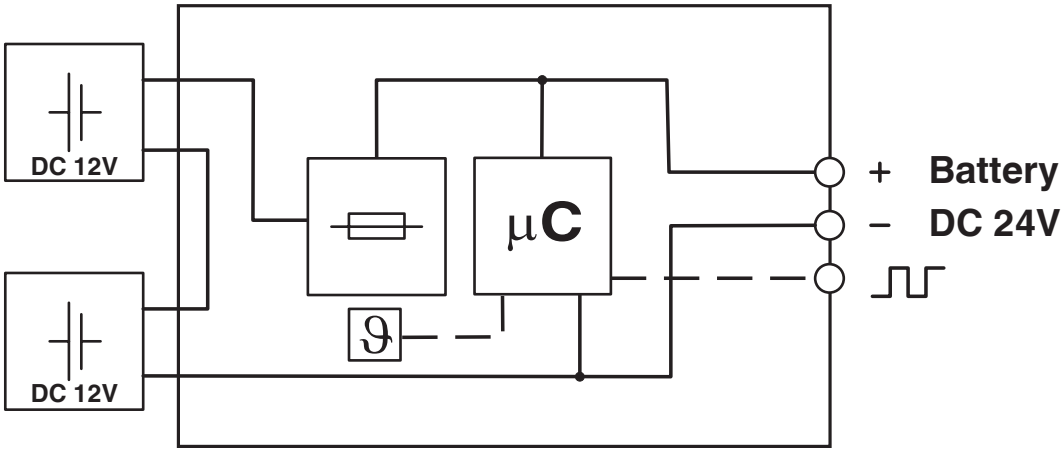

Graphic

Load Current	Buffertime																								
	Minutes											Hours													
	10	12	15	20	25	30	35	40	45	50	55	1	2	3	4	5	6	7	8	9	10	12	14	16	18	20
1 A																										
2 A																										
3 A																										
5 A																										
7 A																										
10 A																										
15 A																										
20 A																										
25 A																										
30 A																										
35 A																										
40 A																										

The data is based on an ambient temperature of +25 °C at the start of use.

2320416 UPS-BAT/VRLA-WTR/24DC/13AH **2320429** UPS-BAT/VRLA-WTR/24DC/26AH

VRLA-WTR battery buffer times for QUINT DC UPS

Graphic

Load Current	Buffertime																
	Minutes										Hours						
	1	2	3	5	10	20	30	40	45	50	1	2	3	5	8	10	15
15 W																	
35 W																2x	
55 W															2x		
90 W														2x			
125 W													2x	2x			
180 W													2x				
275 W												2x					
400 W											2x						

2x: In this case, two battery modules of the same capacity are required. The data is based on an ambient temperature of +25 °C at the start of use.

2320416 UPS-BAT/VRLA-WTR/24DC/13AH **2320429** UPS-BAT/VRLA-WTR/24DC/26AH

VRLA-WTR battery buffer times for QUINT AC UPS 500 VA

Graphic

Load Current	Buffertime																		
	Minutes													Hours					
	1	2	3	4	5	8	10	15	20	25	30	40	50	1	1.5	2	3	4	6	9
100 W	2x	2x	2x	2x	2x	2x	2x	2x	2x	2x	2x	2x	2x	2x	2x	2x	2x	2x	2x	2x
200 W	2x	2x	2x	2x	2x	2x	2x	2x	2x	2x	2x	2x	2x	2x	2x	2x	2x	2x		
300 W	2x	2x	2x	2x	2x	2x	2x	2x	2x	2x	2x	2x	2x	2x	2x	2x	2x			
400 W	2x	2x	2x	2x	2x	2x	2x	2x	2x	2x	2x	2x	2x	2x	2x	2x				
500 W	2x	2x	2x	2x	2x	2x	2x	2x	2x	2x	2x	2x	2x	2x	2x					
600 W	2x	2x	2x	2x	2x	2x	2x	2x	2x	2x	2x	2x	2x	2x	2x					
700 W	2x	2x	2x	2x	2x	2x	2x	2x	2x	2x	2x	2x	2x	2x						
800 W	2x	2x	2x	2x	2x	2x	2x	2x	2x	2x	2x	2x	2x	2x						
900 W	2x	2x	2x	2x	2x	2x	2x	2x	2x	2x	2x	2x	2x							

2x: There are always two battery modules of the same capacity are required . The data is based on an ambient temperature of +25 °C at the start of use.

2320416 UPS-BAT/VRLA-WTR/24DC/13AH **2320429** UPS-BAT/VRLA-WTR/24DC/26AH

VRLA-WTR battery buffer time for QUINT AC UPS 1 kVA

Graphic

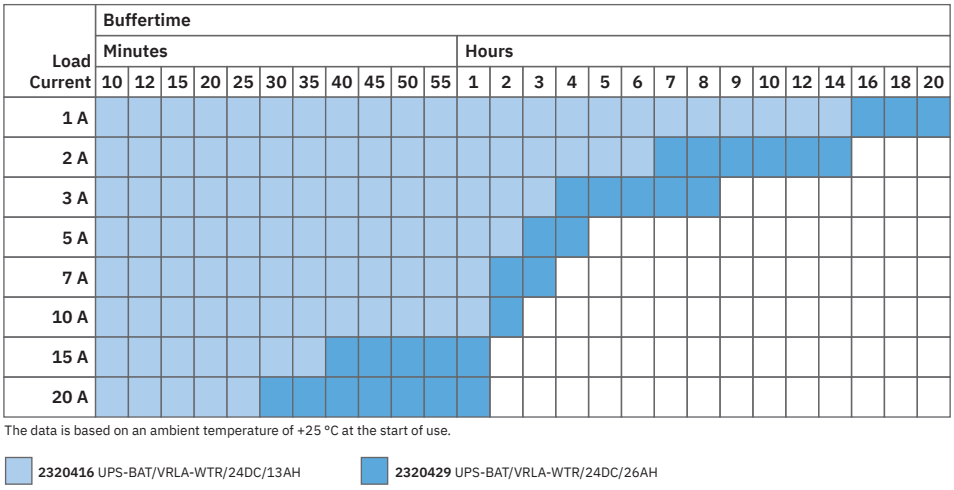

The data is based on an ambient temperature of +25 °C at the start of use.

2320416 UPS-BAT/VRLA-WTR/24DC/13AH **2320429** UPS-BAT/VRLA-WTR/24DC/26AH

VRLA-WTR battery buffer times for TRIO UPS 2G

Graphic

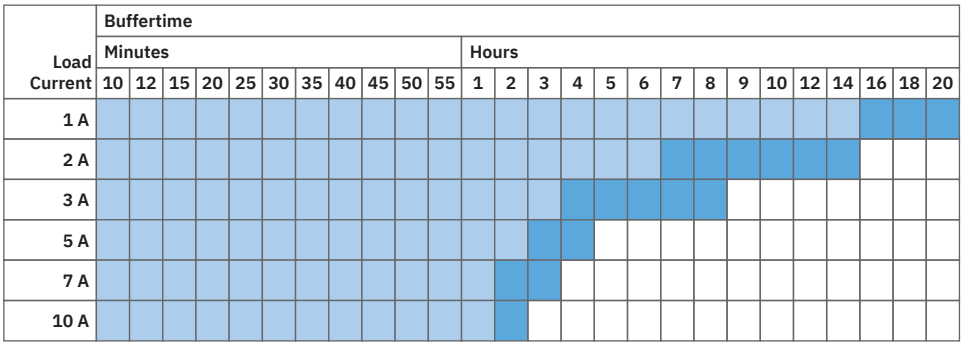

The data is based on an ambient temperature of +25 °C at the start of use.

2320416 UPS-BAT/VRLA-WTR/24DC/13AH **2320429** UPS-BAT/VRLA-WTR/24DC/26AH

VRLA-WTR battery buffer times for TRIO3 UPS

Approvals

To download certificates, visit the product detail page: https://www.phoenixcontact.com/us/products/2320429

cUL Recognized
Approval ID: E211944

UL Recognized
Approval ID: E211944

IECEE CB Scheme
Approval ID: DK-29680-A1-M1-UL

LR
Approval ID: LR22136091TA

BV
Approval ID: 41516/B0 BV

UL Listed
Approval ID: E123528

cUL Listed
Approval ID: E123528

ABS
Approval ID: 22-2244289-PDA

DNV
Approval ID: TAA0000265

	Nominal voltage U_N	Nominal current I_N	Cross section AWG	Cross section mm^2
keine				
	500 V	41 A	-	- 6

cUL Listed
Approval ID: E199827

UL Listed
Approval ID: E199827

Classifications

ECLASS

ECLASS-13.0	27050403
ECLASS-15.0	27050403

ETIM

ETIM 10.0	EC003893

UNSPSC

UNSPSC 21.0	26111700

Environmental product compliance

EU RoHS

Fulfills EU RoHS substance requirements	Yes
Exemption	7(a), 7(c)-I

China RoHS

Environment friendly use period (EFUP)	EFUP-15
	An article-related China RoHS declaration table can be found in the download area for the respective article under "Manufacturer declaration". For all articles with EFUP-E, no China RoHS declaration table issued and required.

EU REACH SVHC

REACH candidate substance (CAS No.)	Lead(CAS: 7439-92-1)
SCIP	e820281b-4250-4995-b18c-bbb6cab2a92b

Phoenix Contact 2026 © - all rights reserved
https://www.phoenixcontact.com

Phoenix Contact USA
586 Fulling Mill Road
Middletown, PA 17057, United States
(+717) 944-1300
info@phoenixcon.com