FL ISOLATOR 1000-RJ/RJ - Network isolator

2313915

https://www.phoenixcontact.com/us/products/2313915

Please be informed that the data shown in this PDF document is generated from our online catalog. Please find the complete data in the user documentation. Our general terms of use for downloads are valid.



Passive network isolator for electrical isolation in Ethernet networks. This protects Ethernet devices from potential differences of up to 4 kV. Can be used for transmission speeds of up to 1 Gbps. Possible to connect two RJ45 plugs.

Product description

The FL ISOLATOR is used for electrical isolation in copper-based Ethernet networks. In industrial environments, potential differences pose a constant problem with regard to interference-free data transmission. The high-quality isolation for up to 4 kV provides reliable protection for Ethernet devices and interfaces. This results in considerably higher immunity to interference in industrial applications.

Your advantages

- No power supply required
- Dielectric strength of up to 4 kV
- Protection against aggressive environmental influences, particularly harsh industrial environments, thanks to coated PCB
- Approval for railway applications (rolling stock) in accordance with EN 50155 and EN 50121
- Electrical isolation of data cables and cable shielding
- Extended temperature range of -25 °C ... +85 °C
- Mounting on EN DIN rails
- Transmission speed of up to 1000 Mbps
- Continuous insulation voltage of 250 VRMS
- Shipbuilding approval in accordance with DNV GL

Commercial data

Item number	2313915
Packing unit	1 pc

Minimum order quantity	1 pc
Sales key	DN07
Product key	DNC332
GTIN	4046356574563
Weight per piece (including packing)	118.5 g
Weight per piece (excluding packing)	119 g
Customs tariff number	85176990
Country of origin	DE

Technical data

Notes

Note on application

Note on application	Only for industrial use

Product properties

Product type	Network isolator
MTBF	5446 Years (Telcordia standard, 25°C temperature, 21% operating cycle (5 days a week, 8 hours a day))
	2959 Years (Telcordia standard, 40°C temperature, 34.25% operating cycle (5 days a week, 12 hours a day))

Electrical properties

Electrical isolation	Ethernet // Ethernet
Insulation voltage input/output	250 V_{rms}
Test voltage data interface/data interface	4 kV AC (50 Hz, 1 min.)

Connection data

Supply

Tightening torque	0.56 Nm ... 0.79 Nm

Interfaces

Signal	Ethernet
	PROFINET

Data: Ethernet interface, 10/100/1000Base-T(X) in accordance with IEEE 802.3

Serial transmission speed	10/100/1000 Mbps
Connection method	RJ45 jack
No. of channels	1
Transmission length	≤ 100 m (Total length across both ports (dependent on data rate and cable used))

Data: Ethernet interface, 10/100/1000Base-T(X) in accordance with IEEE 802.3

Serial transmission speed	10/100/1000 Mbps
Connection method	RJ45 jack
No. of channels	1

Dimensions

Dimensional drawing	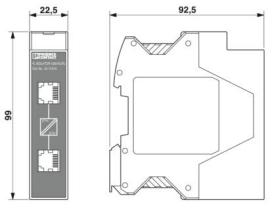
Width	22.5 mm
Height	99 mm
Depth	92 mm

Material specifications

Color (Housing)	green (RAL 6021)
Material (Housing)	PA 6.6-FR

Mechanical tests

Vibration resistance in accordance with EN 60068-2-6/IEC 60068-2-6	Operation: 5g, 10...150 Hz, 2.5 h, in XYZ direction
Shock in accordance with EN 60068-2-27/IEC 60068-2-27	Operation: 25g, 11 ms period, half-sine shock pulse

Environmental and real-life conditions

Ambient conditions

Degree of protection	IP20
Ambient temperature (operation)	-25 °C ... 75 °C
Ambient temperature (storage/transport)	-25 °C ... 85 °C
Altitude	≤ 5000 m (For restrictions, see the manufacturer's declaration for altitude operation)
Permissible humidity (operation)	10 % ... 95 % (non-condensing)
Permissible humidity (storage/transport)	5 % ... 95 % (non-condensing)

Approvals

CE

Certificate	CE-compliant

UL, USA/Canada

Identification	508 Listed

Corrosive gas test

Identification	ISA-S71.04-1985 G3 Harsh Group A

Shipbuilding

Identification	DNV GL

Shipbuilding data

Temperature	B
Humidity	A

Vibration	A
EMC	B
Enclosure	Required protection according to the Rules shall be provided upon installation on board

EMC data

Electromagnetic compatibility	Conformance with EMC Directive 2014/30/EU

Electrostatic discharge

Standards/regulations	EN 61000-4-2

Electromagnetic HF field

Standards/regulations	EN 61000-4-3

Electromagnetic HF field

Frequency range	26 MHz ... 3 GHz (Test Level 3)
Field intensity	20 V/m
Comments	Criterion A

Fast transients (burst)

Standards/regulations	EN 61000-4-4

Conducted interference

Standards/regulations	EN 61000-4-6

Conducted interference

Frequency range	0.15 MHz ... 80 MHz
Comments	Criterion A
Voltage	10 V

Emitted interference

Standards/regulations	EN 61000-6-4
Radio interference voltage in acc. with EN 55011	Class B, area of application: Industry and residential
Emitted radio interference in acc. with EN 55011	Class B, area of application: Industry and residential

Standards and regulations

Standards/regulations	EN 50121
	EN 50155
Standard designation	Railway applications

Mounting

Mounting type	DIN rail mounting

Drawings

Dimensional drawing

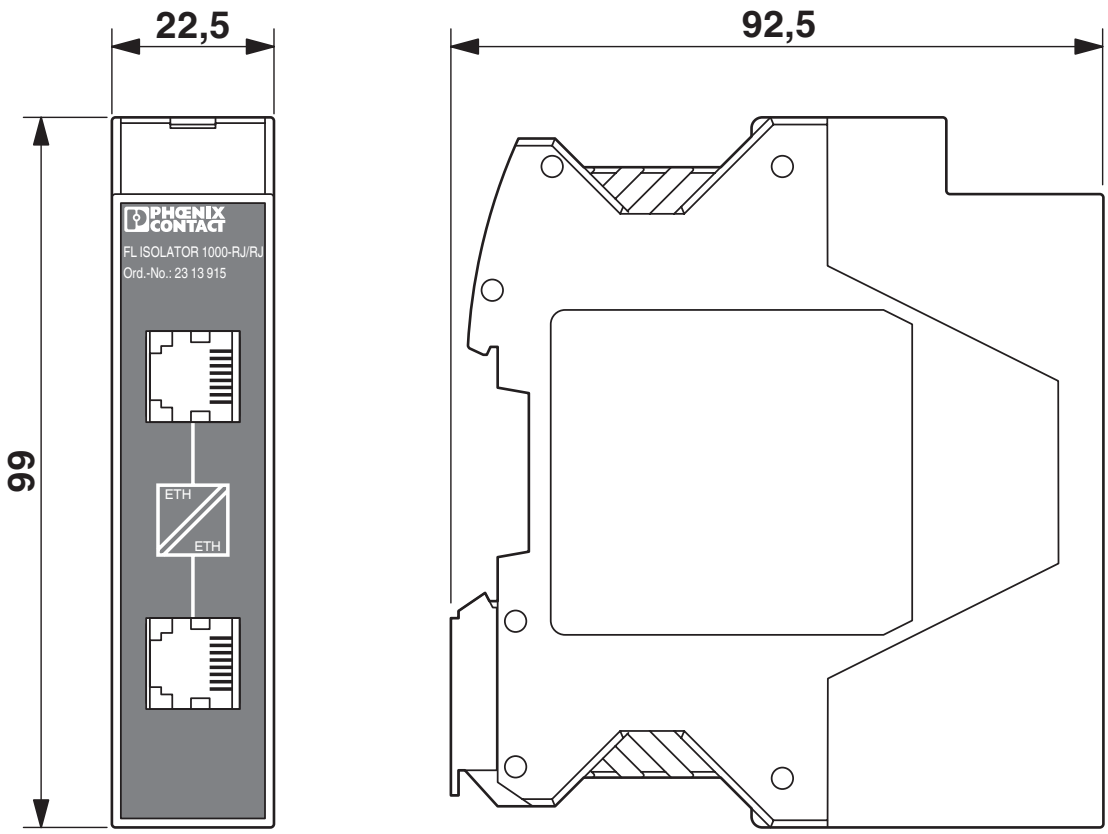

Housing dimensions

Schematic diagram

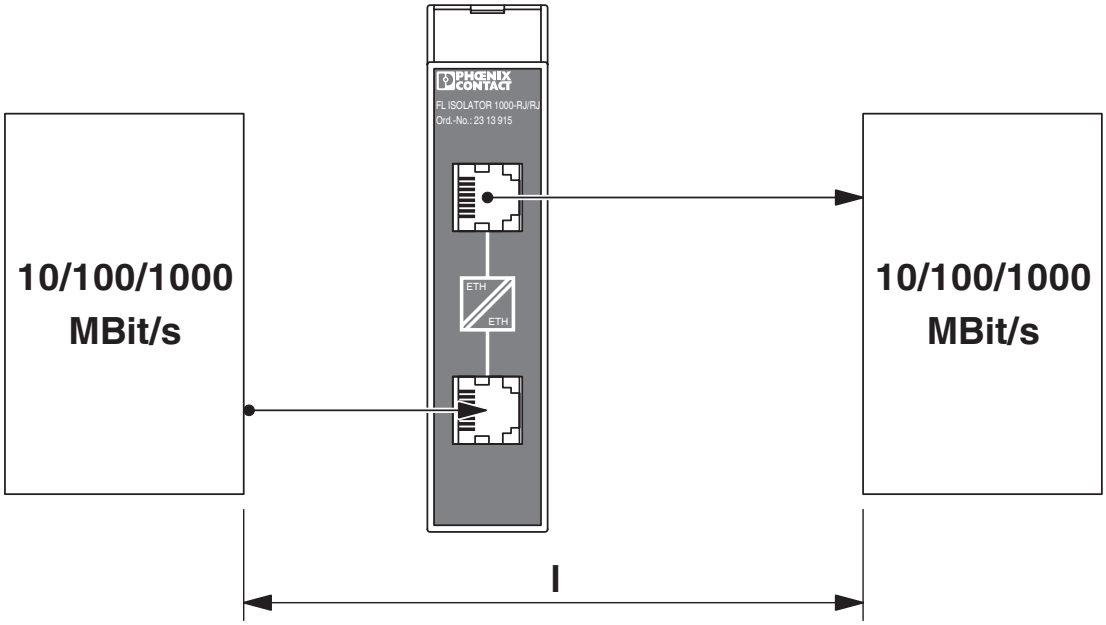

Block diagram

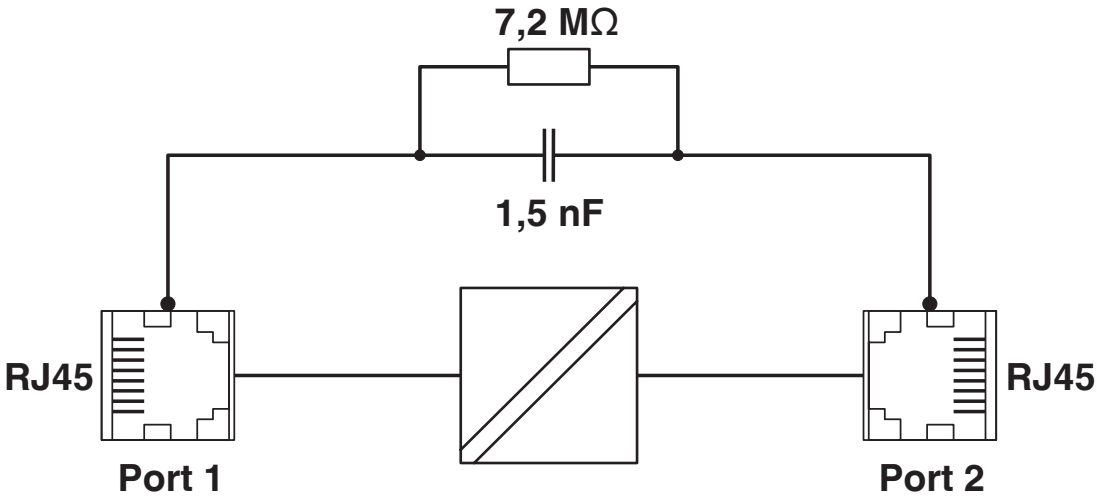

Approvals

To download certificates, visit the product detail page: https://www.phoenixcontact.com/us/products/2313915

cULus Listed
Approval ID: E238705

DNV GL
Approval ID: TAA00001KR_7

Classifications

ECLASS

ECLASS-13.0	27240692
ECLASS-15.0	27240692

ETIM

ETIM 10.0	EC002584

UNSPSC

UNSPSC 21.0	39121400

Environmental product compliance

EU RoHS

Fulfills EU RoHS substance requirements	Yes
Exemption	7(c)-I

China RoHS

Environment friendly use period (EFUP)	EFUP-50
	An article-related China RoHS declaration table can be found in the download area for the respective article under "Manufacturer declaration". For all articles with EFUP-E, no China RoHS declaration table issued and required.

EU REACH SVHC

REACH candidate substance (CAS No.)	No substance above 0.1 wt%

Phoenix Contact 2026 © - all rights reserved
https://www.phoenixcontact.com

Phoenix Contact USA
586 Fulling Mill Road
Middletown, PA 17057, United States
(+717) 944-1300
info@phoenixcon.com