PLC-V8/FLK14/IN/M - System connection

2304115

https://www.phoenixcontact.com/us/products/2304115

Please be informed that the data shown in this PDF document is generated from our online catalog. Please find the complete data in the user documentation. Our general terms of use for downloads are valid.



V8 adapter for 8 x PLC-INTERFACE (6.2 mm), controller: PLC system cabling of input cards, connection 1: IDC/FLK pin strip 1x 14-position, connection 2: Plug-in connection (Can be snapped onto 8x PLC-INTERFACE terminals), connection 3: Screw connection 1x 2-position, number of channels: 8, control logic: minusschaltend

Commercial data

Item number	2304115
Packing unit	1 pc
Minimum order quantity	1 pc
Sales key	C421
Product key	DK21D1
GTIN	4017918924423
Weight per piece (including packing)	105.7 g
Weight per piece (excluding packing)	107.9 g
Customs tariff number	85369010
Country of origin	DE

Technical data

Product properties

Product type	Interface module
Product family	PLC-INTERFACE
Number of positions	14
No. of channels	8

Insulation characteristics: Air clearances and creepage distances

Insulation	Functional insulation
Overvoltage category	II
Pollution degree	2

Electrical properties

Operating voltage range	18 V DC ... 33.6 V DC
Current (per branch)	≤ 1 A
Current (Power supply)	≤ 3 A

Air clearances and creepage distances

Rated insulation voltage	50 V
Rated surge voltage	0.5 kV (1.2/50 µs)

Supported controller: SIEMENS S7-1500

Suitable I/O card	6ES7521-1BH50-0AA0

Supported controller: ABB S800 I/O

Suitable I/O card	DI814

Supported controller: EMERSON DeltaV

Suitable I/O card	VE4001S2T2B3 Series 2
	VE4001S5T2B5
	VE4001S2T2B5

Supported controller: MITSUBISHI MELSEC Q

Suitable I/O card	QY41P
	QY42P
	QH42P

Supported controller: MITSUBISHI MELSEC L

Suitable I/O card	LY41NT1P
	LY42NT1P

Connection data

Connection 1 (control level)

Connection in acc. with standard	IEC 60603-13
Connection method	IDC/FLK pin strip

Number of connections	1
Number of positions	14
Insertion/withdrawal cycles	> 50
Pitch	2.54 mm

Connection 2 (field level)

Connection method	Plug-in connection
Note	Can be snapped onto 8x PLC-INTERFACE terminals

Connection 3 (supply)

Connection method	Screw connection
Stripping length	8 mm
Screw thread	M3
Number of connections	1
Number of positions	2
Conductor cross-section rigid	0.2 mm² ... 4 mm²
Conductor cross-section rigid (2 conductors with same cross section)	0.2 mm² ... 1.5 mm²
Conductor cross-section flexible	0.2 mm² ... 2.5 mm²
	0.25 mm² ... 2.5 mm² (Ferrule without plastic sleeve)
	0.25 mm² ... 2.5 mm² (Ferrule with plastic sleeve)
Conductor cross-section flexible (2 conductors with same cross section)	0.2 mm² ... 1.5 mm²
	0.25 mm² ... 0.75 mm² (Ferrule without plastic sleeve)
	0.5 mm² ... 1.5 mm² (TWIN ferrule with plastic sleeve)
Conductor cross-section AWG	24 ... 12
Tightening torque	0.5 Nm ... 0.6 Nm
Pitch	5 mm

Signaling

Status display present	yes
Operating voltage display	Green LED

Dimensions

Item dimensions

Width	49.93 mm
Height	41 mm
Depth	55.8 mm

Material specifications

Color	gray (RAL 7042)
Flammability rating according to UL 94	V0
Housing insulation material	Polyamide PA non-reinforced

Environmental and real-life conditions

Ambient conditions

Degree of protection (Module)	IP20
Degree of protection (Installation location)	≥ IP54
Ambient temperature (operation)	-40 °C ... 70 °C
Ambient temperature (storage/transport)	-40 °C ... 70 °C
Altitude	≤ 2000 m

Approvals

CE

Certificate	CE-compliant

UKCA

Certificate	UKCA-compliant

UL, USA/Canada

Identification	Class I, Div. 2, Groups A, B, C, D T4

UL, Canada

Identification	Class I, Zone 2, Ex ec IIC Gc T4 X

UL, USA

Identification	Class I, Zone 2, AEx ec IIC T4

Shipbuilding approval

Certificate	TAE0000196

Shipbuilding data

Temperature	D
Humidity	A
Vibration	C
EMC	B
Enclosure	Required protection according to the Rules shall be provided upon installation on board

EMC data

Electromagnetic compatibility	Conformance with EMC directive
Low Voltage Directive	Conformance with Low Voltage Directive

Standards and regulations

Air clearances and creepage distances

Standards/regulations	EN IEC 60664-1

Mounting

Mounting type	Plug-on assembly
Assembly note	in rows with zero spacing
Mounting position	any

Notes

Notes on operation	For proper use, the specifications of the installation directive (see Downloads) must be observed. For applications or use with third-party products, the specifications, and the safety and warning instructions of the respective third-party manufacturer must also be met.

Drawings

Schematic diagram

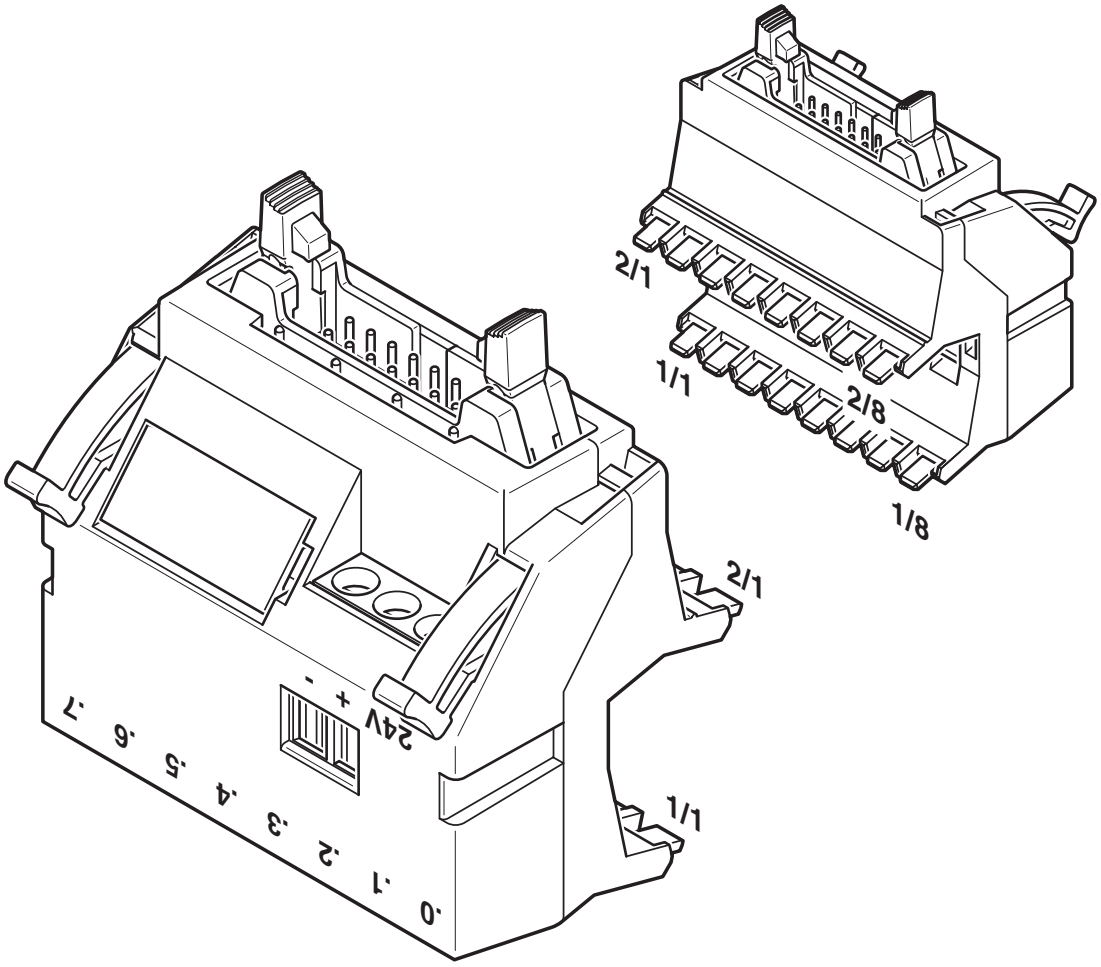

Circuit diagram

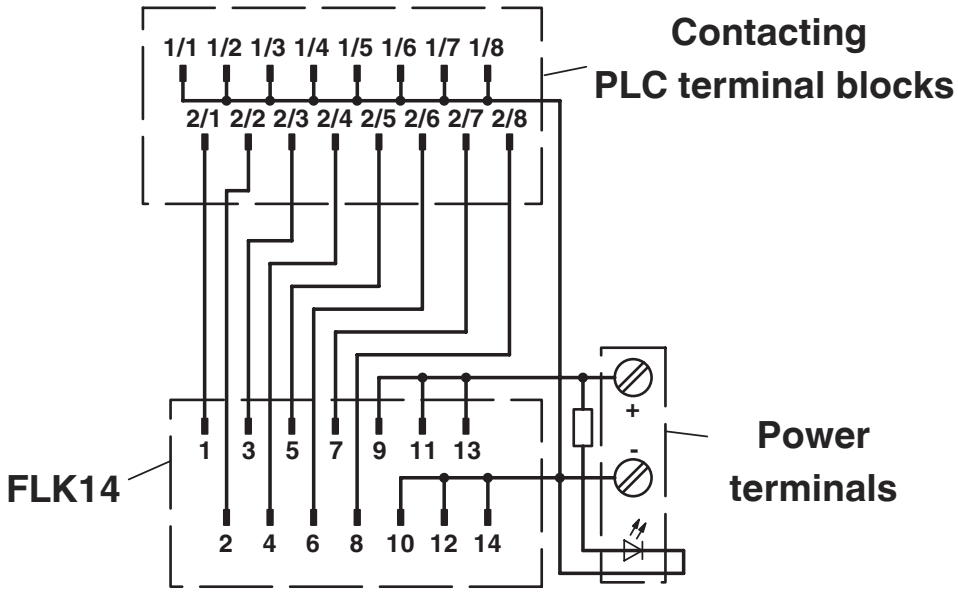

Connection scheme: PLC-V8/FLK14/IN/M

Approvals

To download certificates, visit the product detail page: https://www.phoenixcontact.com/us/products/2304115

cUL Recognized
Approval ID: E238705

	Nominal voltage U_N	Nominal current I_N	Cross section AWG	Cross section mm^2
keine				
	24 V	1 A	-	-

UL Recognized
Approval ID: E238705

	Nominal voltage U_N	Nominal current I_N	Cross section AWG	Cross section mm^2
keine				
	24 V	1 A	-	-

UL Listed
Approval ID: FILE E 172140

cUL Listed
Approval ID: FILE E 172140

DNV
Approval ID: TAE0000196

cUL Listed
Approval ID: E199827

UL Listed
Approval ID: E199827

Classifications

ECLASS

ECLASS-13.0	27141152
ECLASS-15.0	27141152

ETIM

ETIM 10.0	EC002780

UNSPSC

UNSPSC 21.0	39121400

Environmental product compliance

EU RoHS

Fulfills EU RoHS substance requirements	Yes
Exemption	6(c)

China RoHS

Environment friendly use period (EFUP)	EFUP-50
	An article-related China RoHS declaration table can be found in the download area for the respective article under "Manufacturer declaration". For all articles with EFUP-E, no China RoHS declaration table issued and required.

EU REACH SVHC

REACH candidate substance (CAS No.)	Hexahydromethylphthalic anhydride(CAS: n/a)
	Lead(CAS: 7439-92-1)
SCIP	91547a40-5044-48a2-a4a5-3ac43dd8d50e

EF3.1 Climate Change

CO2e kg	1.579 kg CO2e

Phoenix Contact 2026 © - all rights reserved
https://www.phoenixcontact.com

Phoenix Contact USA
586 Fulling Mill Road
Middletown, PA 17057, United States
(+717) 944-1300
info@phoenixcon.com