FLKM 14-PA-AB/1756/EXTC - Front adapter

2302861

https://www.phoenixcontact.com/us/products/2302861

Please be informed that the data shown in this PDF document is generated from our online catalog. Please find the complete data in the user documentation. Our general terms of use for downloads are valid.



VARIOFACE front adapters, for Allen Bradley ControlLogix and Honeywell PlantScape, max. 2 x 8 channels can be connected.
The front adapters are pushed into the high 1756-TBE hoods (not supplied as standard).

Commercial data

Item number	2302861
Packing unit	1 pc
Minimum order quantity	1 pc
Note	Made to order (non-returnable)
Sales key	C421
Product key	DK231R
GTIN	4017918917524
Weight per piece (including packing)	60 g
Weight per piece (excluding packing)	32 g
Customs tariff number	85369010
Country of origin	DE

Technical data

Product properties

Product type	Front adapter
Product family	VARIOFACE

Insulation characteristics: Air clearances and creepage distances

Insulation	Functional insulation
Overvoltage category	II
Pollution degree	2

Electrical properties

Operating voltage (AC)	≤ 30 V AC
Operating voltage (DC)	≤ 60 V DC
Nominal operating mode	100% operating factor
Current (per branch)	≤ 1 A
Current (Voltage supply via screw connection)	≤ 8 A

Air clearances and creepage distances

Rated insulation voltage	63 V
Rated surge voltage	0.6 kV (1.2/50 µs)

Supported controller: ALLEN-BRADLEY ControlLogix

Suitable I/O card	1756-IA8D
	1756-OB16E
	1756-IF6I
	1756-IR6I
	1756-IT6I
	1756-OF4
	1756-OF6CI
	1756-OF6VI
	1756-OF8
	1756-PLS
	1756-IF6CIS
	1756-OF8H

Supported controller: HONEYWELL Experion PKS C200

Suitable I/O card	TC-IDX 081
	TC-IXR 061
	TC-IAH 061
	TC-OAH 061
	TC-OAV 061
	TC-OAV 081
	TC-IXL 061

Connection data

Connection 1 (control level)

Connection method	Plug-in connection
Number of positions	20

Connection 2 (field level)

Connection in acc. with standard	IEC 60603-13
Connection method	IDC/FLK pin strip
Number of connections	2
Number of positions	14
Insertion/withdrawal cycles	> 50
Pitch	2.54 mm

Connection 3 (supply)

Connection method	Screw connection
Stripping length	7 mm
Screw thread	M3
Number of positions	4
Conductor cross-section rigid	0.14 mm² ... 1.5 mm²
Conductor cross-section rigid (2 conductors with same cross section)	0.08 mm² ... 0.5 mm²
Conductor cross-section flexible	0.14 mm² ... 1.5 mm²
	0.25 mm² ... 1.5 mm² (Ferrule without plastic sleeve)
	0.25 mm² ... 0.75 mm² (Ferrule with plastic sleeve)
Conductor cross-section flexible (2 conductors with same cross section)	0.08 mm² ... 0.75 mm²
	0.25 mm² ... 0.34 mm² (Ferrule without plastic sleeve)
	0.5 mm² ... 0.5 mm² (TWIN ferrule with plastic sleeve)
Conductor cross-section AWG	28 ... 16
Tightening torque	0.22 Nm ... 0.25 Nm
Pitch	3.81 mm

Dimensions

Item dimensions

Width	104.9 mm
Height	33 mm
Depth	40.84 mm

Environmental and real-life conditions

Ambient conditions

Degree of protection (Module)	IP00
Degree of protection (Installation location)	≥ IP54
Ambient temperature (operation)	-20 °C ... 50 °C
Ambient temperature (storage/transport)	-20 °C ... 70 °C

Altitude	≤ 2000 m

Standards and regulations

Air clearances and creepage distances

Standards/regulations	EN IEC 60664-1

Mounting

Mounting type	Plug-in mounting
Mounting position	any

Notes

Notes on operation	For proper use, the specifications of the installation directive (see Downloads) must be observed. For applications or use with third-party products, the specifications, and the safety and warning instructions of the respective third-party manufacturer must also be met.

Drawings

Circuit diagram

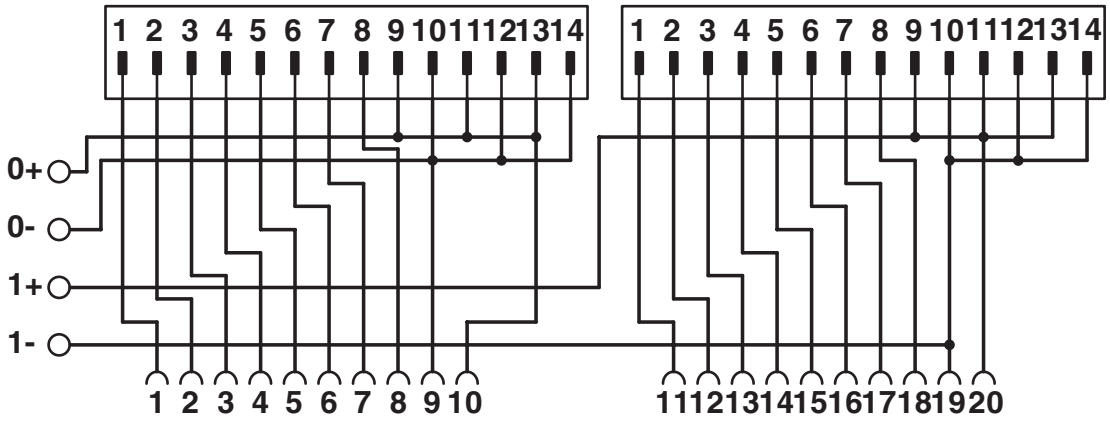

Connection scheme FLKM 14-PA-AB/1756/EXTC

Approvals

To download certificates, visit the product detail page: https://www.phoenixcontact.com/us/products/2302861

cUL Recognized
Approval ID: E238705

	Nominal voltage U_N	Nominal current I_N	Cross section AWG	Cross section mm^2
keine				
	125 V	1 A	-	-

UL Recognized
Approval ID: E238705

	Nominal voltage U_N	Nominal current I_N	Cross section AWG	Cross section mm^2
keine				
	125 V	1 A	-	-

Classifications

ECLASS

ECLASS-13.0	27242292
ECLASS-15.0	27242292

ETIM

ETIM 10.0	EC002584

UNSPSC

UNSPSC 21.0	32151600

Environmental product compliance

EU RoHS

Fulfills EU RoHS substance requirements	Yes
Exemption	6(c)

China RoHS

Environment friendly use period (EFUP)	EFUP-50
	An article-related China RoHS declaration table can be found in the download area for the respective article under "Manufacturer declaration". For all articles with EFUP-E, no China RoHS declaration table issued and required.

EU REACH SVHC

REACH candidate substance (CAS No.)	Lead(CAS: 7439-92-1)
SCIP	26b4d031-9f49-4fcb-976b-9838a7111249

Phoenix Contact 2026 © - all rights reserved
https://www.phoenixcontact.com

Phoenix Contact USA
586 Fulling Mill Road
Middletown, PA 17057, United States
(+717) 944-1300
info@phoenixcon.com